HITACHI PROGRAMMABLE AUTOMATION CONTROLLER

HX Series

APPLICATION MANUAL (Hardware)

(SERVICE MANUAL)

NJI-637B(X)

○ Warranty period and coverage

The warranty period is the shorter period either 18 months from the date of manufacture or 12 months from the date of installation.
However even within the warranty period, the warranty will be void if the fault is due to;

(1) Incorrect use as directed in this manual and / or in the application manual.

(2) Malfunction or failure caused by external device.

(3) Attempted repair by unauthorized personnel.

(4) Other force majeure, such as natural disasters, which beyond the responsibility of manufacturer.

The warranty is for the PAC only, any damage caused to third party equipment by malfunction of the PAC is not covered by the warranty.

○ Repair

Any investigation or repair after the warranty period cannot be covered as free of charge. Also any faults caused by above (1) to (4), will be charged for its repair (or for its investigation), even if the product is within the warranty period. In case of any contact, please ask your supplier or local Hitachi distributor. (Depending on failure part, investigation may not be possible to apply)

○ Ordering parts or asking questions

In case of repair, replacement parts ordering, or any other inquiries, please have the following details ready before contacting the place of purchase.

(1) Model

(2) Manufacturing number (MFG.NO.)

(3) Details of the malfunction

○ Reader of this manual

This manual is described for the following person.

・Person considering to install PAC

・PAC system engineer

・Person handling PAC

・Person who maintain the installed PAC

Warning

(1) This manual may not be reproduced in its entirety or ant portion thereof without prior consent.
(2) The content of this document may be changed without notice.
(3) This document has been created with utmost care. However, if errors or questionable areas are found, please contact us.

Windows® is registered trademarks of America and other registered countries of Microsoft Corp. of the United States.

CODESYS is registered trademarks of 3S-Smart Software Solutions GmbH.

EtherCAT® is registered trademark and patented technology, licensed by Beckhoff Automation GmbH, Germany.

Ethernet is registered trademarks of Fuji Xerox Co., Ltd.

Company name or a product name is trademark or a registered trademark.

Safety Precautions

Read this manual and related documents thoroughly before installing, operating, performing preventive maintenance or performing inspection, and be sure to use the unit correctly. Use this product after acquiring adequate knowledge of the unit, all safety information, and all cautionary information. Also, make sure this manual enters the possession of the chief person in charge of safety maintenance.
Safety caution items are classifies as “Danger” and “Caution” in this document.

DANGER : Cases where if handled incorrectly a dangerous circumstance may be created, resulting in possible death or severe injury.

CAUTION : Cases where if handled incorrectly a dangerous circumstance may be created, resulting in possible minor to medium injury to the body, or only mechanical damage

However, depending on the circumstances, items marked with CAUTION may result in major accidents.

In any case, they both contain important information, so please follow them closely.

Icons for prohibited items and required items are shown below:

: Indicates prohibited items (items that may not be performed). For example, when open flames are prohibited, is shown.

: Indicates required items (items that must be performed). For example, when grounding must be performed, is shown.

1. About installation

CAUTION

- Use this product in an environment as described in the catalog and this document.
  If this product is used in an environment subject to high temperature, high humidity, excessive dust, corrosive gases, vibration or shock, it may result in electric shock, fire or malfunction.
- Perform installation according to this manual.
  If installation is not performed adequately, it may result in dropping, malfunction or an operational error in the unit.
- Do not allow foreign objects such as wire chips to enter the unit.
  They may become the cause of fire, malfunction or failure.

2. About wiring

REQUIRED

- Always perform grounding (FE terminal).
  If grounding is not performed, there is a risk of electric shocks and malfunctions.

CAUTION

- Connect power supply that meets rating.
  If a power supply that does not meet rating is connected, fire may be caused.
- The wiring operation should be performed by a qualified personnel.
  If wiring is performed incorrectly, it may result in fire, damage, or electric shock.

3. Precautions when using the unit

DANGER

- Do not touch the terminals while the power is on.
  There is a risk of electric shock.
- Structure the emergency stop circuit, interlock circuit, etc. outside the programmable automation controller (hereinafter referred to as PAC).
  Damage to the equipment or accidents may occur due to failure of the PAC.
  However, do not interlock the unit to external load via relay drive power supply of the relay output module.

CAUTION

- When performing program change, forced output, RUN, STOP, etc., while the unit is running, be sure to verify safety.
  Damage to the equipment or accidents may occur due to operation error.
- Supply power according to the power–up order.
  Damage to the equipment or accidents may occur due to malfunctions.

CAUTION

- Use power supply unit of EH series or HX series for supplying electric power.

CAUTION

- Do not connect DC power supply module EH-PSD / HX-PSD to a master power circuit. Supply a power to EH-PSD / HX-PSD through an appropriate isolation transformer less than up to 150 VA by all means.

4. About preventive maintenance

DANGER

- Do not connect the +, - of the battery in reverse. Also, do not charge, disassemble, heat, place in fire, or short circuit the battery.
  There is a risk of explosion or fire.

PROHIBITED

- Do not disassemble or modify the unit.
  Electric shock, malfunction or failure may result.

CAUTION

- Turn off the power supply before removing or attaching module/unit.
  Electric shock, malfunction or failure may result.

Revision History

No.	Description of revision	Date of revision	Manual number
1	The first edition	2016.11	NJI-637(X)
2	Runtime update to V3.5 SP13	2020.01	NJI-637A(X)
3	Runtime update to V3.5 SP16	2021.04	NJI-637B(X)

Table of Contents

Chapter 1 Introduction 1-1 to 1-4

1.1 Doing after Unpacking 1-1
1.2 About Manuals 1-2

Chapter 2 Features 2-1 to 2-10

2.1 Features of HX Series 2-1
2.2 Integrated Development System HX-CODESYS 2-5
2.3 Communication Function 2-9
2.4 System Configuration 2-10

Chapter 3 General Specifications 3-1 to 3-6

3.1 General Specifications 3-1
3.2 List of System Equipment 3-2
3.3 List of Current Consumption 3-5

Chapter 4 CPU Module 4-1 to 4-16

4.1 Outline 4-1
4.2 Functional Specifications 4-5
4.3 Ethernet Port Specifications 4-8
4.4 USB Port Specifications 4-11
4.5 SD Card Specifications 4-12
4.6 Serial Port Specifications 4-13
4.7 Battery Specifications 4-15

Chapter 5 Power Supply, Base, I/O Controller 5-1 to 5-8

5.1 Power Supply Module 5-1
5.2 Base Unit 5-5
5.3 I/O Controller 5-8

Chapter 6 Digital I/O Module 6-1 to 6-48

6.1 Outline 6-1
6.2 Specifications 6-5

Chapter 7 Analog I/O Module, Resistance Temperature Detector Input Module, Thermocouple Input Module 7-1 to 7-30

7.1 12-bit Analog I/O Module 7-1
7.2 14-bit Analog I/O Module 7-12
7.3 Isolated Analog I/O Module 7-17
7.4 Resistance Temperature Detector Input Module 7-22
7.5 Thermocouple Input Module 7-27

Chapter 8 Positioning and Counter Module 8-1 to 8-8

8.1 Single-axis Positioning Module (Discontinued) 8-1
8.2 High Speed Counter Module 8-4

Chapter 9 Communication and Network Module 9-1 to 9-36

9.1 CPU Link Module 9-1
9.2 PROFIBUS-DP Master Module 2 9-4
9.3 PROFIBUS-DP Slave Controller 2 9-9
9.4 EtherCAT Slave Controller 9-13
9.5 FL-net Module 3 9-18
9.6 Serial Interface Module 9-22
9.7 DeviceNet Master Module 2 9-27
9.8 DeviceNet Slave Controller 2 9-32

Chapter 10 Accessories 10-1 to 10-6

10.1 Dummy Module 10-1
10.2 Expansion Cable 10-1
10.3 Terminal Block for 32/64 Points I/O Module 10-2
10.4 Cable for 32 / 64-Point Module 10-4
10.5 Cable for Counter Input Module 10-5

Chapter 11 PAC Installation, Mounting, Wiring 11-1 to 11-10

11.1 Installation 11-1
11.2 Mounting Module 11-3
11.3 Wiring 11-4

Chapter 12 Maintenance and Inspection 12-1 to 12-2

12.1 Daily and Periodic Inspection 12-1
12.2 Life of Product 12-2

Chapter 13 Troubleshooting 13-1 to 13-6

13.1 Error Code 13-1
13.2 Corrective Actions when Error Occurs 13-4
13.3 Error Libraries 13-6

Chapter 1 Introduction

Thank you very much for choosing Hitachi Programmable Automation Controller (hereinafter referred to as PAC) HX series.

This application manual informs hardware of HX series which is a high-performance PAC system suitable for IoT.
The contents relevant to programming has been separated as an application manual software edition.
Please read this manual and the following manuals carefully when constructing a system using HX series.

Table 1.1 List of Description materials

Items	Title of material	Manual number
HX series	Application manual (Hardware)	NJI-637*(X)
	Application manual (Software)	NJI-638*(X)

* The last alphabet of the manual No. stands for version starting from blank, A, B, C...

1.1 Doing after Unpacking

(1) Preparation of programming software HX-CODESYS

Please use HX-CODESYS for programming HX series CPU module (hereinafter referred to as HX-CPU). The following table indicates the available version combination of HX-CPU firmware and HX-CODESYS and do not use with the programming software EHV-CODESYS because it does not support HX-CPU.

HX-CPU Software version	HX-CODESYS version
V3.5.8.2x	HX-CODESYS Ver.3.5 SP8 Patch4 or newer
V3.5.13.4x	HX-CODESYS Ver.3.5 SP13 Patch2 or newer
V3.5.16.2x	HX-CODESYS Ver.3.5 SP16 Patch2 or newer

(2) Initializing of user program

Since a memory in the HX-CPU is not set at first, error code to mean memory error may be displayed on the 7-segment LED. Please initialize the memory in the HX-CPU first by using HX-CODESYS.

(3) Battery error indication

HX-CPU is shipped without a lithium battery. The battery is sold separately from CPU.
Therefore when Battery error detection*1 (OK LED blinking in the battery error) of HX-CODESYS is set Enable, HX-CPU detects a battery error, and "71" is displayed in 7-segment LED. When you want to invalidate battery error detection, please set this parameter in Disable (invalidity).

*1 The tab of Configuration in Device of the project tree has the setting of Battery error detection.
Battery error detection is set in Enable in initial setup.

1.2 About Manuals

Various modules for EH-150 / EHV series shown in Table 1.2 are able to be used with HX-CPU. There is some module that HX-CPU does not support yet. Un-supported modules are going to be supported.

Please refer to manuals shown in Table 1.2 for the detail specification of various modules. Please refer to chapter 5 or after of this manual for modules which manual number are blank in Table 1.2.

Table 1.2 Related manuals to HX-CPU (1/2)

Product name	Model name	Specifications	Manual number*1	
			Japanese	English
Power supply module	EH-PSA	Input 100 to 240 V AC Output	-	-
	HX-PSA	Input 100 to 240 V AC Output	-	NJI-645(X)
	EH-PSD	Input 21.6 to 26.4 V DC Output	-	-
	HX-PSD	Input 21.6 to 26.4 V DC Output	-	NJI-645(X)
	EH-PSR	Input 100 to 240 V AC Output for redundancy	NJI-554	NJI-554(X)
I/O controller	EH-IOCH2	I/O controller for expansion unit	NJI-440	NJI-440(X)
Digital input module	EH-XD8	8 points, 24 V DC input	-	-
	EH-XD16	16 points, 24 V DC input	-	-
	EH-XDL16	16 points, 24 V DC input, Intensified filter	-	-
	EH-XDS16	16 points, 24 V DC Fast input	NJI-607	NJI-607(X)
	EH-XDA16	16 points, 48 V DC input	NJI-615	NJI-615(X)
	EH-XD32	32 points, 24 V DC input	-	-
	EH-XDL32	32 points, 24 V DC input, Intensified filter	-	-
	EH-XDS32	32 points, 24 V DC Fast input	NJI-382	NJI-382(X)
	EH-XD32E	32 points, 24 V DC input, Spring type terminal block	NJI-438	NJI-438(X)
	EH-XDL32E	32 points, 24 V DC input, Spring type terminal block, Intensified filter	NJI-438	NJI-438(X)
	EH-XD32H	32 points, 24 V DC input, Compatible connecter with EM and H-200	NJI-534	NJI-534(X)
	EH-XDB32	32 points, 12 V DC input	NJI-382	NJI-382(X)
	EH-XDBL32	32 points, 12 V DC input	NJI-382	NJI-382(X)
	EH-XTT32	32 points, 3 to 15 V DC input	NJI-678	NJI-678(X)
	EH-XD64	64 points, 24 V DC input	-	-
	EH-XDL64	64 points, 24 V DC input	NJI-372	NJI-372(X)
	EH-XDB64	64 points, 12 V DC input	NJI-372	NJI-372(X)
	EH-XDBL64	64 points, 12 V DC input	NJI-372	NJI-372(X)
	EH-XA16	16 points, 100 to 120 V AC input	-	-
	EH-XAH16	16 points, 200 to 240 V AC input	-	-
Digital output module	EH-YR8B	8 points, relay output (isolated contact point), 100 / 240VAC, 24V DC	NJI-427	NJI-427(X)
	EH-YR12	12 points, relay output, 100 / 240 V AC, 24 V DC	-	-
	EH-YR16	16 points, relay output, 100 / 240 V AC, 24 V DC, 16 points / 1 common	NJI-416	NJI-416(X)
	EH-YR16D	16 points, relay output, 100 / 240 V AC, 24 V DC, 8 points / 1 common	NJI-416	NJI-416(X)
	EH-YT8	8 points, transistor output, 12 / 24 V DC (sink type)	-	-
	EH-YTP8	8 points, transistor output, 12 / 24 V DC (source type)	-	-
	EH-YT16	16 points, transistor output, 12 / 24 V DC (sink type)	-	-
	EH-YTP16	16 points, transistor output, 12 / 24 V DC (source type)	-	-
	EH-YTA16	16 points, transistor output, 24 / 48 V DC (sink type)	NJI-634	NJI-634(X)
	EH-YTPA16	16 points, transistor output, 24 / 48 V DC (source type)	NJI-634	NJI-634(X)
	EH-YTP16S	16 points, transistor output, 12 / 24 V DC (source type), short-circuit protection	-	-
	EH-YT32	32 points, transistor output, 12 / 24 V DC (sink type)	-	-
	EH-YTP32	32 points, transistor output, 12 / 24 V DC (source type)	-	-
	EH-YT32E	32 points, transistor output, 12 / 24 V DC (sink type) Spring terminal block	NJI-439	NJI-439(X)
	EH-YTP32E	32 points, transistor output, 12 / 24 V DC (source type) Spring terminal block	NJI-439	NJI-439(X)
	EH-YT32H	32 points, transistor output, 5 / 12 / 24 V DC (sink type) Compatible connecter with EM and H-200	NJI-535	NJI-535(X)
	EH-YTT32	32 points, TTL output, 4 to 15 V DC (sink type)	NJI-679	NJI-679(X)

Table 1.2 Related manuals to HX-CPU (2/2)

Product name	Model name	Specifications	Manual number*1	
			Japanese	English
Digital output module	EH-YT64	64 points, transistor output, 12 / 24 V DC (sink type)	-	-
	EH-YTP64	64 points, transistor output, 12 / 24 V DC (source type)	-	-
	EH-YS16	16 points, triac output, 100 / 240 V AC	NJI-437	NJI-437(X)
TTL input output module	EH-MTT32	Input 16 points, Output 16 points, 4 to 27 V DC Compatible connector with PHM-TT	NJI-597	NJI-597(X)
	EH-MTT32A	16 points, input, 3 to 15 V DC (sink type) 16 points, output, 4 to 15 V DC (sink type)	NJI-680	NJI-680(X)
Analog input module	EH-AX44	12 bits analog input (4 to 20 mA, 0 to 10 V) each 4 ch.	-	-
	EH-AX8V	12 bits analog input 8 ch., Voltage (0 to +10 V)	-	-
	EH-AX8H	12 bits analog input 8 ch., Voltage (-10 to +10 V)	-	-
	EH-AX8I	12 bits analog input 8 ch., Current (4 to 20 mA)	-	-
	EH-AX8IO	12 bits analog input 8 ch., Current (0 to 22 mA)	-	-
	EH-AXH8M	14 bits analog input 8 ch. (0 to 22 mA, 4 to 22 mA, -10 to +10 V, 0 to 10 V)	NJI-446	NJI-446(X)
	EH-AXG5M	Isolation between channels, 16 bits analog input 5ch. (0 to 22 mA, 4 to 22 mA, -10 to +10 V, 0 to 10 V)	NJI-586	NJI-586(X)
Analog output module	EH-AY22	12 bits analog output (4 to 20 mA, 0 to 10 V) each 2 ch.	-	-
	EH-AY2H	12 bits analog output 2 ch., Voltage (-10 to +10 V)	-	-
	EH-AY4V	12 bits analog output 4 ch., Voltage (0 to +10 V)	-	-
	EH-AY4H	12 bits analog output 4 ch., Voltage (-10 to +10 V)	-	-
	EH-AY4I	12 bits analog output 4 ch., Current (4 to 20 mA)	-	-
	EH-AYH8M	14 bits analog output 8 ch., (0 to 22 mA, 4 to 22 mA, 0 to 10 V)	NJI-447	NJI-447(X)
	EH-AYG4M	Isolation between channels, 16 bits analog output 4 ch. (0 to 22 mA, 4 to 22 mA, -10 to +10 V, 0 to 10 V)	NJI-587	NJI-587(X)
RTD input module	EH-PT4	4 channels resistance temperature detector, Signed 15 bits Platinum (Pt 100 Ω / Pt 1000 Ω)	NJI-323	NJI-324(X)
	EH-RTD8	6/8 channels resistance temperature detector, Signed 15 bits Platinum (Pt 100 Ω / Pt 1000 Ω)	NJI-613	NJI-613(X)
Thermocouple input module	EH-TC8	Signed 15 bits, Thermocouple input (K, E, J, T, B, R, S, N) 8 channels	NJI-445	NJI-445(X)
Positioning and counter module	EH-CU	2 channels high-speed counter input, Maximum frequency of 100 kHz, 1/2-phases switchover, 4-point opened collector output	NJI-321	NJI-321(X)
	EH-CUE	1 channel high-speed counter input, Maximum frequency of 100 kHz, 1/2-phases switchover, 2-point opened collector output	NJI-340	NJI-340(X)
	EH-POS *2	1-axis pulse positioning module	NJI-314	NJI-315(X)
Communication module	EH-SIO	Serial communication interface module	NJI-443	NJI-443(X)
	EH-RMP2	PROFIBUS-DP master module, 512 / 512 words I/O, 8 units per CPU can be installed	NJI-621	NJI-621(X)
	EH-IOCP2	PROFIBUS-DP slave controller, 122 / 122 words I/O	NJI-612	NJI-612(X)
	EH-RMD2	DeviceNet master module, 256 / 256 words I/O, 8 units per CPU can be installed	NJI-655	-
	EH-IOCD2	DeviceNet slave controller, 176 words I/O	NJI-655	-
	EH-IOCA	EtherCAT slave controller, 176 words I/O	NJI-599	NJI-599(X)
	EH-FLN3	FL-net interface module	NJI-410	-
	EH-LNK	CPU link module (coaxial), 8 units per CPU can be mounted	NJI-381	NJI-381(X)
	EH-OLNK	CPU link module (optical fiber), 8 units per CPU can be mounted	NJI-395	NJI-395(X)
	EH-OLNKG	CPU link module (support optical fiber GI50 / 125 μm cable), 8 units per CPU can be mounted	NJI-395	NJI-395(X)
	EH-OLNKE	CPU link module (support optical fiber GI62.5 / 125 μm cable), 8 units per CPU can be mounted	NJI-395	NJI-395(X)

*1 The last alphabet of the manual No. stands for version starting from blank, A, B, C...
*2 Discontinued product

MEMO

Chapter 2 Features

2.1 Features of HX Series

Open standards, High-performance, TCO reduction*1

(1) Open standards

The Hitachi HX Series supports global manufacturing by standardized programming with 5 programming languages compatible with the IEC61131-3 international standard. The integrated EtherCAT master function (industrial open network) enables interconnection of a wide range of devices. Seamless data transfer from field level to cloud is achieved via OPC-Unified Architecture.

(2) High-performance

Through the effective combination of up-to-date developed high-performance CPU with CODESYS software, Hitachi provides sequential control (logic) and motion control*3 on one CPU platform with very fast execution speed.

(3) TCO reduction*1

HX Series are designed to provide the functionality of PAC Controller (Programmable Automation Controller) which has both features of PLC and IPC.

HX series contribute to TCO (Total cost of ownership) reduction by drive down cost of installation, development and maintenance.

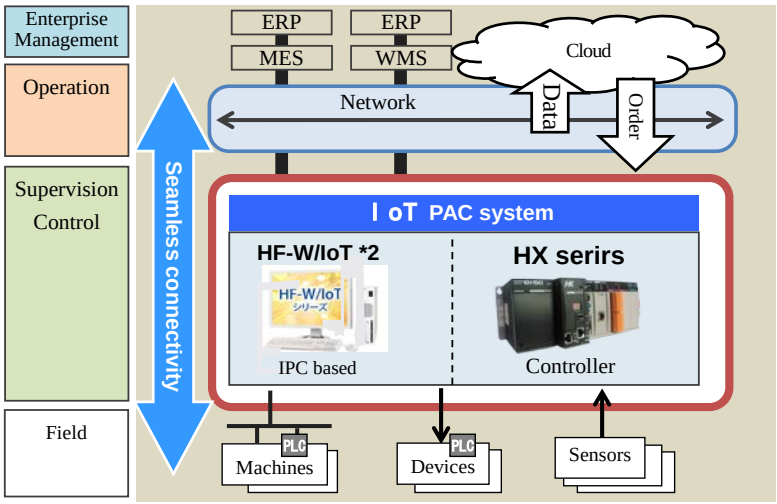

3 Ethernet port as standard

(Full function / CNC motion / Hybrid model)

Various communication modes between master, controller and slave units by one CPU.

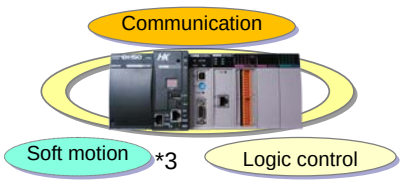

Supporting various field networks

ERP : Enterprise Resource Planning, MES : Manufacturing Execution System

WMS : Warehouse Management System, IPC : Industrial PC

PLC : Programmable Logic Controller

*1 Total Cost of Ownership

*2 HF-W / IoT is a product of Hitachi Industry and Control Solutions, Ltd.

*3 PLCopen based soft-motion control function blocks are available on Motion model and CNC motion model.

All modules of EH-150 series can be used.*1

HX-CPU can assemble all modules of EH-150 series including input and output module and communication module. When using a basic base units and 5 expansion bases, HX-CPU can controls 66 modules and 4,224 I/O points at the maximum.

*1 Some high-function modules will be supported in near future.

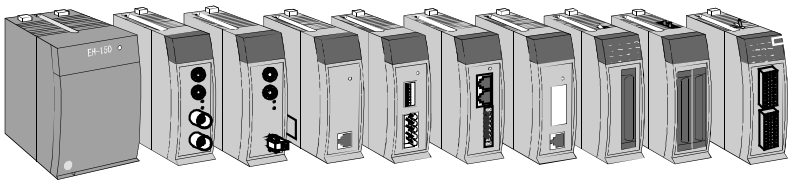

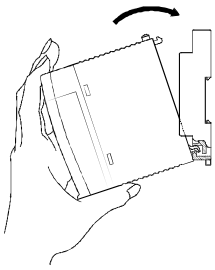

EtherCAT master

In all models of HX-CPU, EtherCAT master function is available in Ethernet ports of the CPU.

Different type of slave devices such as inverters and remote I/O are controlled via EtherCAT.

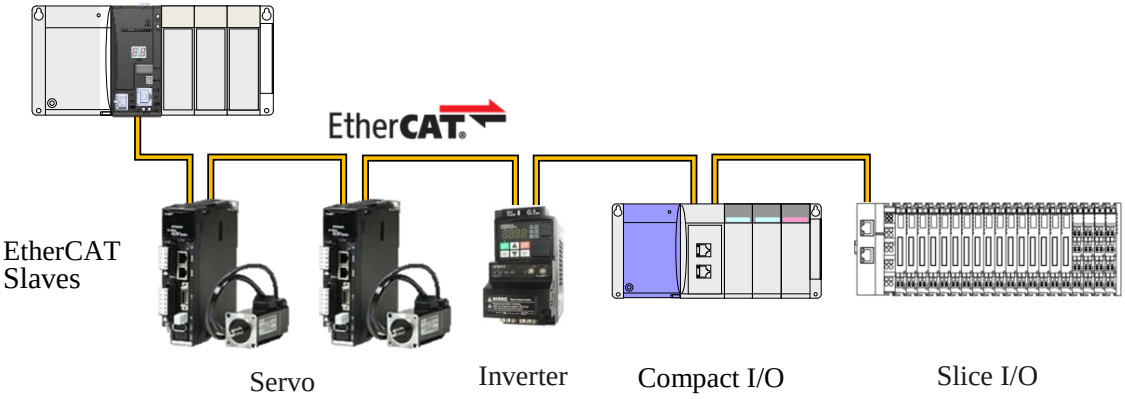

Large size data logging (SD Card)

The Full Function Model has a SD card interface, which makes data logging easy. (Function blocks to access files are available in CODESYS library.)

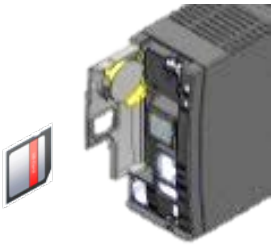

OPC UA Server

The OPC UA (Unified Architecture) is a software interface between different manufacturers' apparatuses and host system based on the concept to unify industrial field and IT field.

HX-CPU has OPC-UA server function as standard. OPC-UA server allows easy connectivity with ERP, MES, SCADA, SAP, and various management and analysis software in host system.

Programmable HMI connectivity

Programmable Touch-panel GP4000 series and EH-TP500 series are connectable with HX-CPU.

- GP4000 series

  All models are available with CODESYS V3 Ethernet Driver

  Selectable from 4 models with 12.1", 10.4", 7.5", 5.7" display size

- EH-TP500 series

  All models are available with CODESYS V3 Ethernet Driver

  Selectable from 4 models with 13.3", 10.4", 7.0", 4.3" display size

Easy maintenance

- Fan-less design

  The CPU has no mechanical parts which need to be replaced.

- Battery-less design

  Non-volatile memory is used for programming memory and data memory. The CPU can retain manufacturing data without optional batteries to protect the data from sudden power failures.

Data and Program Protection

- Block unauthorized access
  - Detect / Protect unauthorized external access
  - Block unauthorized remote login connection
  - Prevent malicious data hacking
- Control user access
  - Login authentification
  - User and group control
  - Setting access authority

Online user registration

Access permission

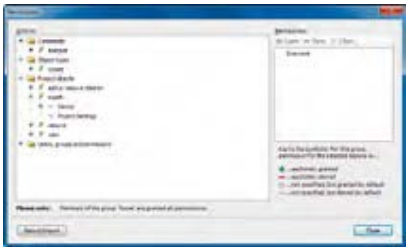

User management

Web visualization (Monitoring via Web Browser)

Easy remote access to the controller´s web server to monitor the application status without preparing a customized HMI. Potential cost reduction for hardware and on site resources through off site monitoring.

- Web server function prepared as standard (in Full Function Model)
- No requirement of customized HMI
- Availability of monitoring via standard web browser
- Remote maintenance, diagnosis and control can be also achieved

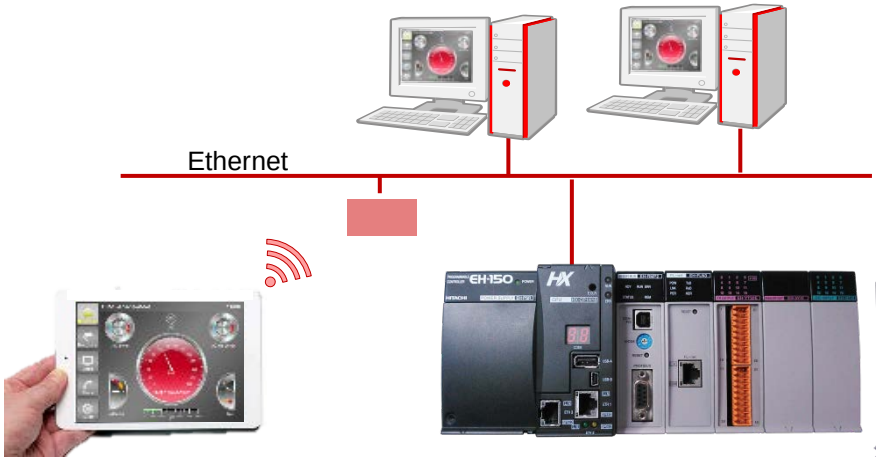

2.2 Integrated Development System HX-CODESYS

CODESYS is the widest-spread IEC61131-3 development system in the world. Over 350 controller manufacturers rely on CODESYS, in addition to tens of thousands of end users from a wide variety of industries.

HX-CODESYS -integrating various support functions in every phase of development

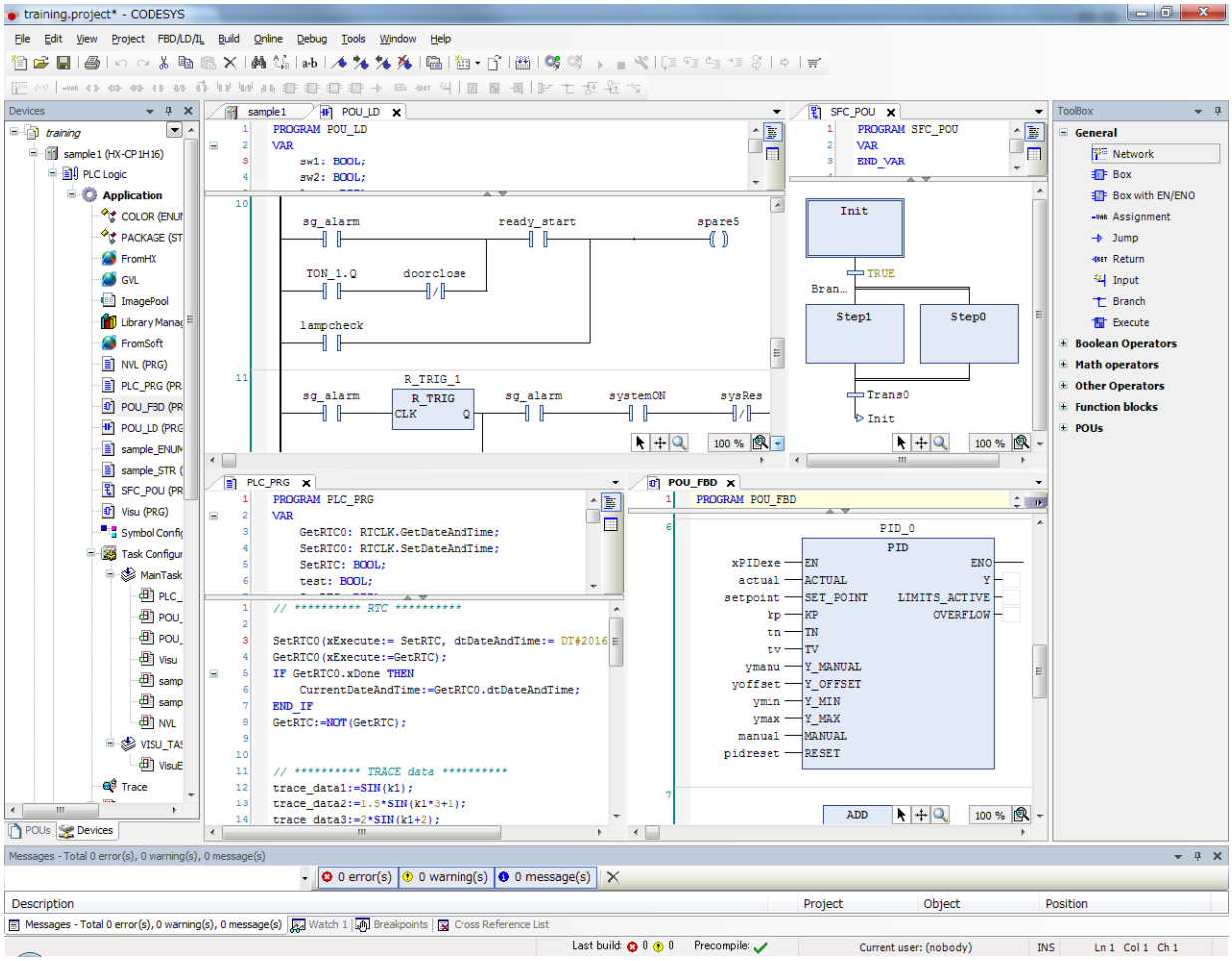

- Project tree allow you collective management of device, task and program of application.
- Integrated configurator for EtherCAT and Modbus can connect I/O channels on slaves to IEC variables.
- HX-CODESYS is including editors for all 5 IEC 61131-3 compliant implementation languages.
- The tool display language supports Japanese, English German, French, Italian, Spanish, Russian, Chinese, eight languages in total.
- Optional object-oriented programming according to IEC 61131-3 (3rd Edition).
- Compiler for optimized powerful machine code of HX-CPU.
- Various function such as automatic input completion and assistance, syntax error check, debug and simulation allow you efficient development.

IEC61131-3 compliant 5 languages available to skill and application

LD (Ladder Diagram)

LD is a graphical language based on relay circuit. LD is suitable for the bit operation such as interlock processes.

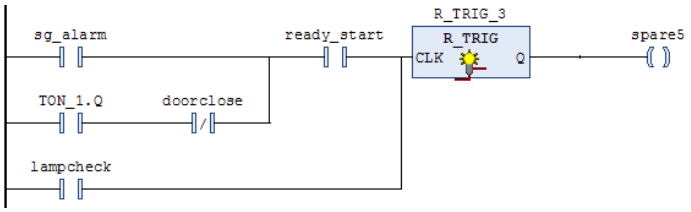

FBD (Function Block Diagram)

FBD is a graphic language which the flow of data and the signal is easy to watch.

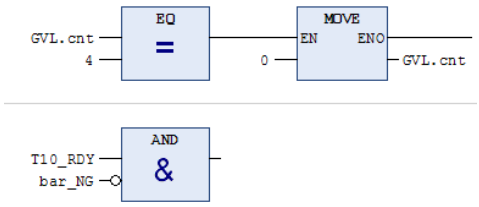

ST (Structured Text)

ST is a text language based on PASCAL. It is suitable for branch, repetition and the arithmetic operation that were weak points in LD.

```
1   count_M3 := count_M3 + 1;
2   L2_wait_time (IN:=FALSE, PT:=T#3.6S);
3   L2_wait_time (IN:=TRUE);
4   FOR i:=0 TO count_T
5       K1_temp[i]:=B1_init; // Reset B1
6   END_FOR
7   IF count_Nmax <24 THEN
8       WHILE vxcnt < 10 DO
9           T1max:=125; // Max.=125 C
10      END_WHILE
11  END_IF
12  B100status:=FALSE;  // B100 complete
```

IL (Instruction List)

IL is a text language suitable for traditional PLC. It is suitable for high speed operation and convenient for read out and collate program.

```
1   LD          t1_open
    AND         t1_rdy
    OR          t2_statusOK
    ST          fwd_cvy10
2   CAL         TON_0(
                IN:= cvyOK,
                PT:= T#3s,
                ET=> ET_TON0)
    LD          TON_0.Q
    ST          start_cvy
```

SFC (Sequential Function Chart)

SFC is a graphic language which can express state transition. It is suitable for process control to step. Each step is able to be described with LD, FBD and IL.

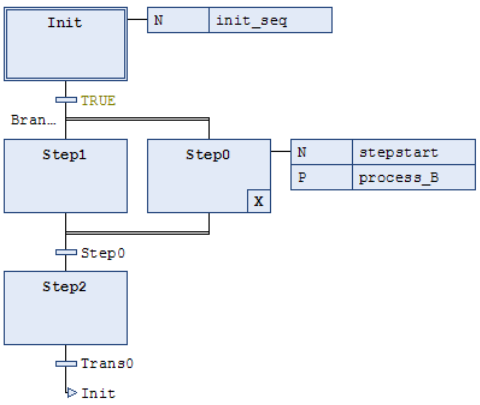

CFC (Continuous Function Chart)

CFC is a graphical language with unrestricted layout of POUs and connections, including feedback paths. (CFC is not IEC61131-3 compliant language.)

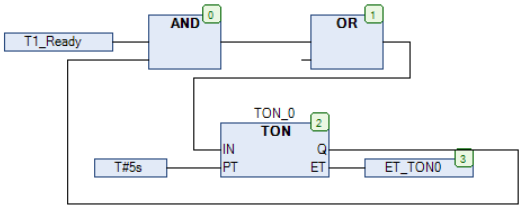

Reduction of development time and cost of IEC 61131-3 compliant applications

- Local variable and Global variable

  You can define Local variables that are effective only in each program and Global variables that are effective in all program. You can make application program having high reusability by using a local variable and global variable properly.

- Structured programming

  You can make programs and function blocks with multi-layer structure. This structured programming improves readability of program, maintenance characteristics and reliability. As a result, application development efficiency increases.

- Library

  Frequently used program or function can be registered as library, which can be called from other projects. Library contents can able to be non-indicated for the distribution use to end users.

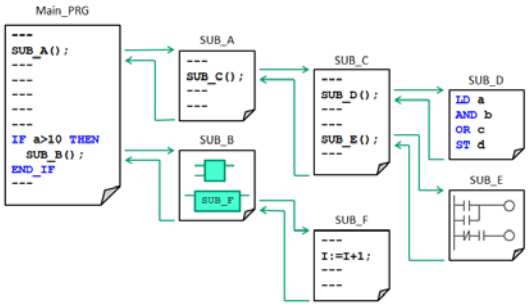

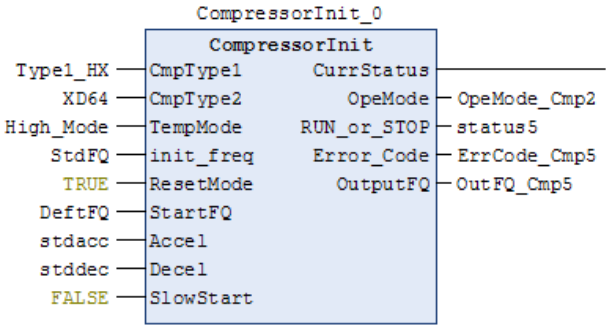

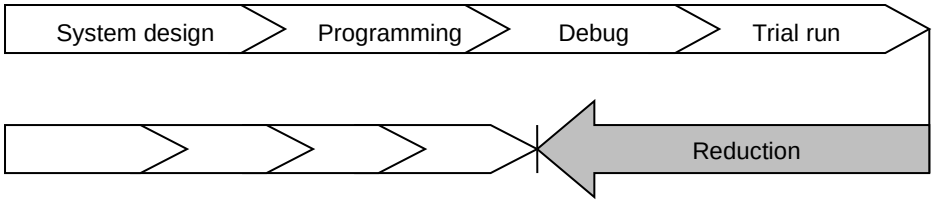

Substantial library

Various libraries such as PID or various conversion are incorporated as a standard library other than IEC61131-3 standard command.

- PID
- Analog output with Slew Rate
- ASCII conversion
- BCD conversion
- Gray code conversion
- String operation
- Analog hysteresis
- Minimum, Maximum, Mean, Variance

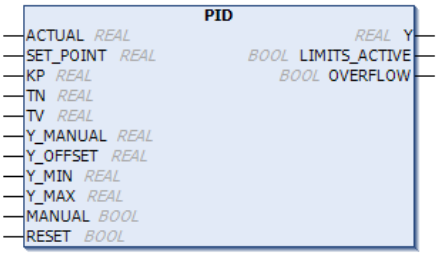

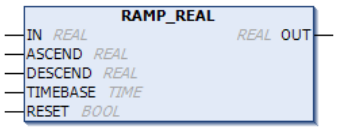

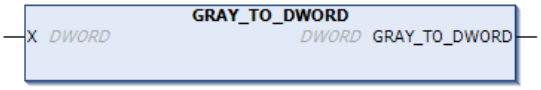

Convenient functions

HX-CODESYS improves programming efficiency, debug efficiency in various convenient functions.

- Automatic input completion and assistance avoiding compile error because of input error.
- Color-coded syntax highlighting, for example keywords and connected brackets.
- In LD editor and FBD editor, you can use ST language in function block.
- You can change any circuit or command to comment with right-click.

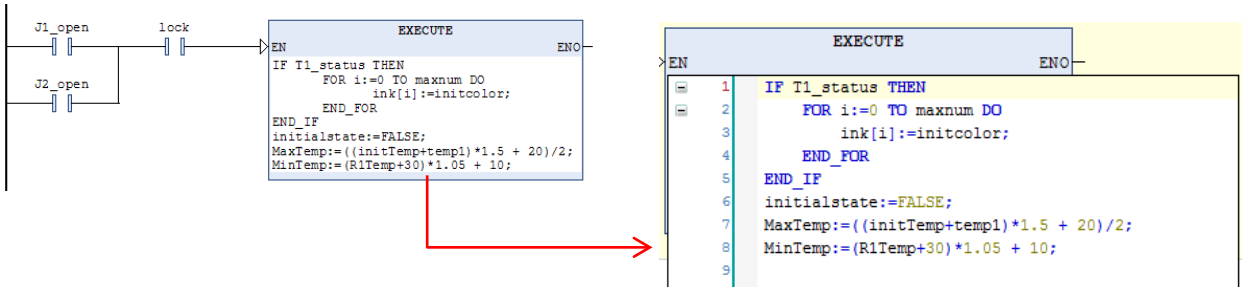

Powerful debugging functions

Powerful debugging functions features save commissioning cost.

- Online-monitor
- Offline-simulation
- Breakpoint
- Force value
- Single step execution
- Single cycle execution
- Flow control
- Program change during run
- Trace
- Visualization
- Web visualization

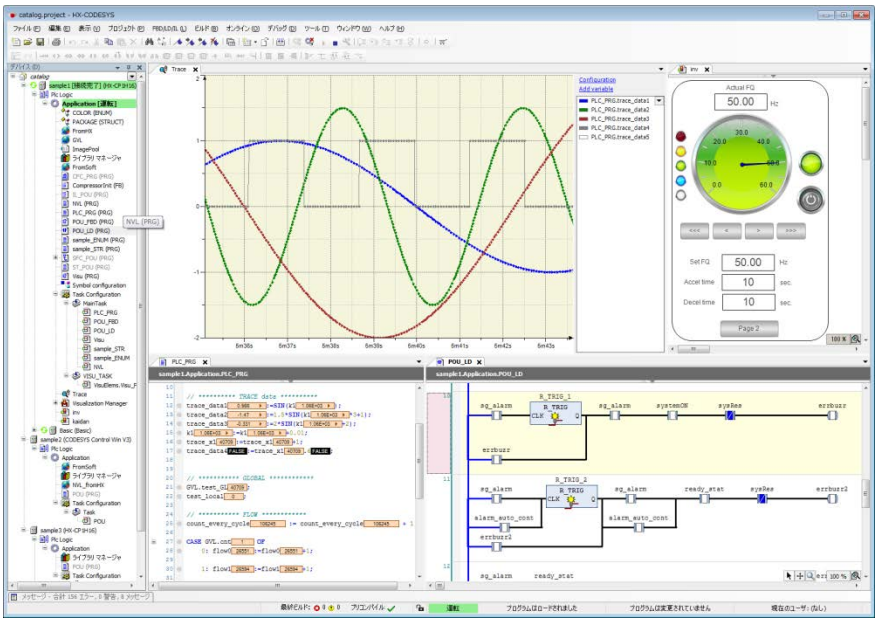

About HX-CODESYS

HX-CODESYS is IEC61131-3 compliant integrated development system for only HX series.

CODESYS® is a registered trademark of 3S-Smart Software Solutions GmbH. HX-CODESYS is the same tool with CODESYS, but is preinstalled device description files and libraries for HX series.

2.3 Communication Function

HX-CPU of Full function / CNC motion / Hybrid model have 3 Ethernet ports. Standard and motion model have 2 Ethernet ports. HX-CPU can communicate with host system, controller, and field devices individually. In addition, by a combination of how to use, HX-CPU can realize various communications.

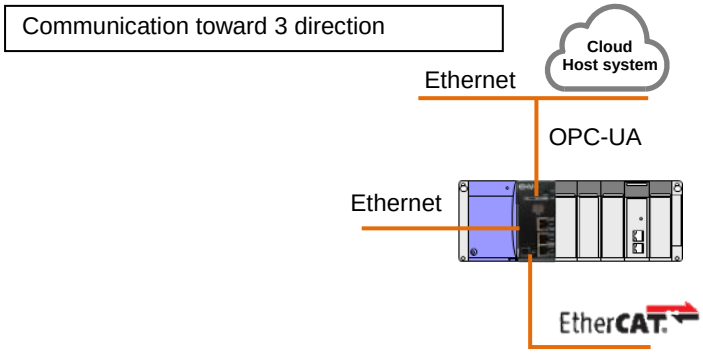

Figure 2.1 Ethernet Communication port

You can build a flexible system with HX-CPU and Hitachi EtherCAT slave products such as coupler type slave (EH-IOCA) and Inverter and Servo. EH-IOCA is a coupler type slave and can be connected with 22 modules per slave node. Therefore, EH-IOCA can control 1,408 points in digital I/O. (176 channels in analog I/O) The configuration example is shown in Figure 2.2.

[Configuration Example]

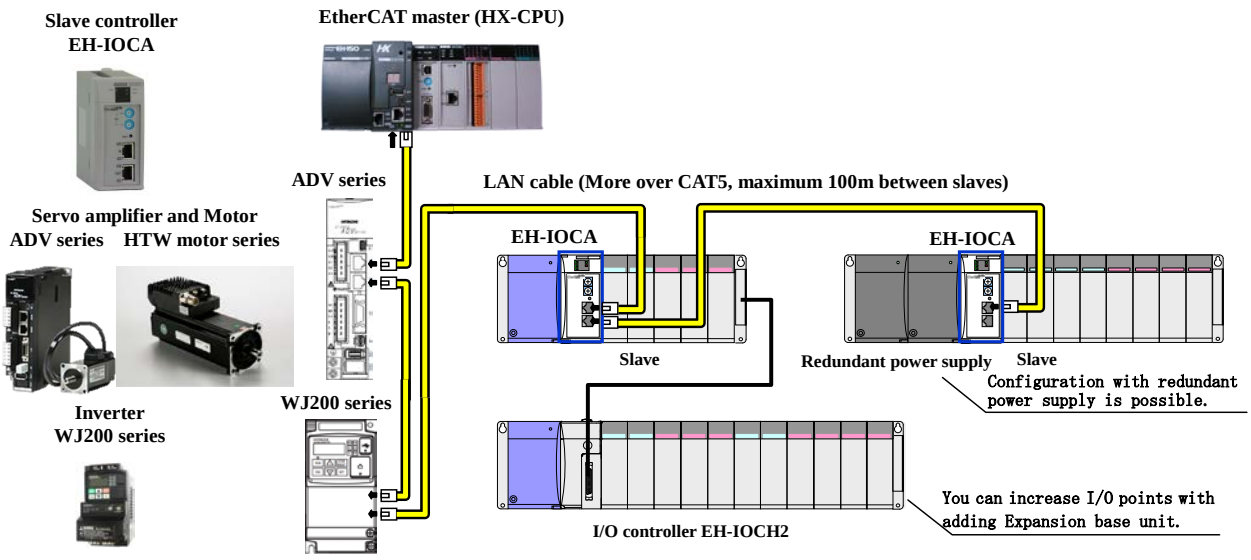

Figure 2.2 EtherCAT configuration

2.4 System Configuration

HX series is a module type programmable automation controller. The basic configuration is shown in Figure 2.3.

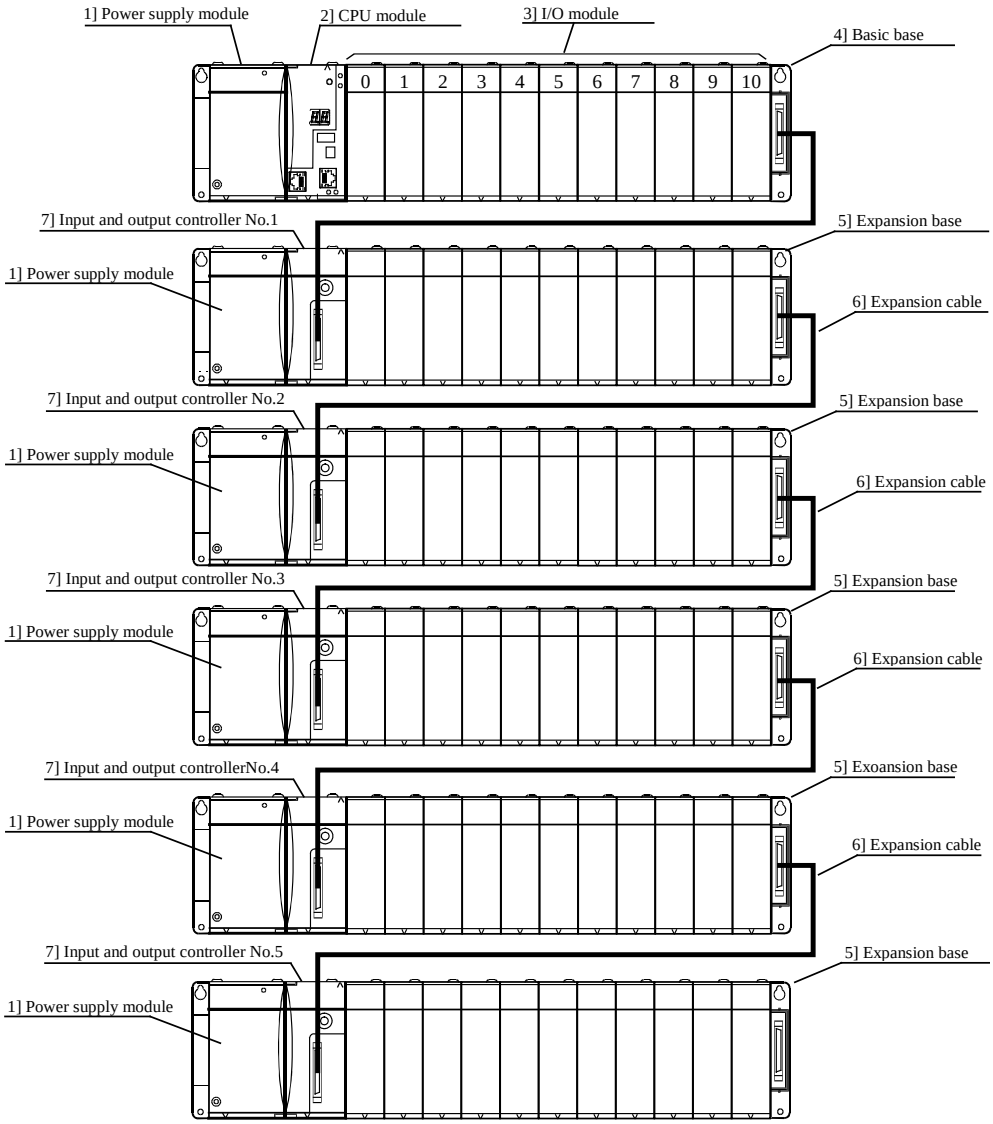

Figure 2.3 System configuration diagram (HX series)

Table 2.1 Modules in HX system configuration

No.	Device name	Description of function
1]	Power supply module	Converts power supply to the power to be used within the HX-series.
2]	CPU module	Performs operations based on the content of the user program, receives input and controls output.
3]	I/O module	Input module, output module, analog module, high-functional module, and communicate module.
4]	Basic base	Base in which the power module, CPU module, I/O module, etc. are loaded.
5]	Expansion base	Base in which the power module, input and output controller, I/O module, etc. are loaded.
6]	Expansion cable	Cable to connect the input and output controller for the expansion base with the basic base. Use 2m betweens stations at the maximum and within 8m at total.
7]	Input and output controller	Interface between the expansion base and the CPU module.

* The basic base 4] and the expansion base 5] are the same product.

Chapter 3 General Specifications

3.1 General Specifications

The general specification is environmental information about setting and use of this product.

Table 3.1 General specifications of HX series

Item	Specification
Operational temperature	0 to 55 °C (* 0 to 45 °C)
Storage temperature	-10 to 75 °C
Operational humidity	5 to 95 % RH (no condensation)
Storage humidity	5 to 95 % RH (no condensation)
Vibration resistance	Conforms to IEC 60068-2-6
Shock resistance	Conforms to IEC 60068-2-27
Usage environment	No corrosive gases, no excessive dust
Structure	Open wall-mount type
Cooling	Natural air cooling

* If HX-CP1S08, HX-CP1H16, HX-CP1S08M, HX-CP1H16M, HXC-CP1H16 or EH-YR16 is used as UL listed product, max. surrounding temperature rating is 45 °C.

3.2 List of System Equipment

(1) Modules

Table 3.2 List of system equipment (1/2)

Product	Model name	Specification	Standard compliant	Remarks
Power module	EH-PSA	Input 100 to 240 V AC, Output 5 V DC 3.8 A, 24 V DC 0.4 A	CE, UL, RCM	*1
	HX-PSA	Input 100 to 240 V AC, Output 5 V DC 3.8 A, 24 V DC 0.4 A	CE, UL, RCM	*1
	EH-PSD	Input 24 V DC, Output 5 V DC 3.8 A	CE, UL, RCM	*1
	HX-PSD	Input 24 V DC, Output 5 V DC 3.8 A	CE, UL, RCM	*1
	EH-PSR	Input 100 to 240 V AC, Output 5 V DC 5.6 A *5	CE	*1
I/O controller	EH-IOCH2	I/O control module (1 unit / expansion base unit)	CE, UL, RCM	*1
Base unit	EH-BS3A	3 I/O modules installed	CE, UL, RCM	Commonly used for basic or expansion base
	EH-BS5A	5 I/O modules installed	CE, UL, RCM	
	EH-BS6A	6 I/O modules installed	CE, UL, RCM	
	EH-BS8A	8 I/O modules installed	CE, UL, RCM	
	EH-BS11A	11 I/O modules installed	CE, UL, RCM	
	EH-BS8R	Redundant power supply, 8 I/O modules installed	-	
Digital input module	EH-XD8	8 pts., 24 V DC input (response time 5 ms)	CE, UL, RCM	*3
	EH-XD16	16 pts., 24 V DC input (response time 5 ms)	CE, UL, RCM	*3
	EH-XDL16	16 pts., 24 V DC input (response time 16 ms)	CE, RCM	*3
	EH-XDS16	16 pts., 24 V DC input (response time 1 ms)	CE, RCM	*3
	EH-XDA16	16 pts., 48 V DC input (response time 5 ms)	CE	
	EH-XD32	32 pts., 24 V DC input (response time 5 ms)	CE, UL, RCM	
	EH-XDL32	32 pts., 24 V DC input (response time 16 ms)	CE	
	EH-XDS32	32 pts., 24 V DC input (response time 1 ms)	CE, RCM	
	EH-XD32E	32 pts., 24 V DC input (response time 1 ms), Spring type terminal	CE, UL, RCM	
	EH-XDL32E	32 pts., 24 V DC input (response time 16 ms), Spring type terminal	CE, UL, RCM	
	EH-XD32H	32 pts., 24 V DC input (response time 4 ms), compatible connector with PIM / H-DM (EM / H-200)	CE, RCM	
	EH-XDB32	32 pts., 12 V DC input (response time 5 ms)	CE	
	EH-XDBL32	32 pts., 12 V DC input (response time 16 ms)	CE	
	EH-XTT32	32 pts., 3 to 15 V DC input (response time 1 ms)	-	
	EH-XD64	64 pts., 24 V DC input (response time 1 ms)	CE, UL, RCM	
	EH-XDL64	64 pts., 24 V DC input (response time 16 ms)	CE	
	EH-XDB64	64 pts., 12 V DC input (response time 1 ms)	CE	
	EH-XDBL64	64 pts., 12 V DC input (response time 16 ms)	CE	
	EH-XA16	16 pts., 100 to 120 V AC input (response time 15 ms)	CE, UL, RCM	*3
	EH-XAH16	16 pts., 200 to 240 V AC input (response time 15 ms)	CE, UL, RCM	*3
Digital output module	EH-YR8B	8 pts., Independent relay output, 100 / 240 V AC, 24 V DC	CE, RCM	*3, *4
	EH-YR12	12 pts., Relay, 100 / 240 V AC, 24 V DC	CE, UL, RCM	*3, *4
	EH-YR16	16 pts., Relay, 100 / 240 V AC, 24 V DC	CE, UL, RCM	*3, *4
	EH-YR16D	16 pts., Relay, 100 / 240 V AC, 24 V DC, 2-common	CE, RCM	*3
	EH-YT8	8 pts., Transistor, 12 / 24 V DC (sink type)	CE, UL, RCM	*3, *4
	EH-YTP8	8 pts., Transistor, 12 / 24 V DC (source type)	CE, UL, RCM	*3, *4
	EH-YT16	16 pts., Transistor, 12 / 24 V DC (sink type)	CE, UL, RCM	*3, *4
	EH-YTP16	16 pts., Transistor, 12 / 24 V DC (source type)	CE, UL, RCM	*3, *4
	EH-YTA16	16 pts., Transistor, 24 / 48 V DC (sink type)	CE	
	EH-YTPA16	16 pts., Transistor, 24 / 48 V DC (source type)	CE	
	EH-YTP16S	16 pts., Transistor, 12 / 24 V DC (source type) *3	CE, UL, RCM	Electric short circuit protection
	EH-YT32	32 pts., Transistor, 12 / 24 V DC (sink type) *2	CE, UL, RCM	
	EH-YTP32	32 pts., Transistor, 12 / 24 V DC (source type) *2	CE, UL, RCM	
	EH-YT32E	32 pts., Transistor, 12 / 24 V DC (sink type), Spring type terminal	CE, UL, RCM	
	EH-YTP32E	32 pts., Transistor, 12 / 24 V DC (source type), Spring type terminal	CE, UL, RCM	
	EH-YT32H	32 pts., Transistor, 5 / 12 / 24 V DC (sink type), compatible connector with POM / H-DM (EM / H-200)	CE, RCM	
	EH-YTT32	32 pts., TTL, 4 to 15 V DC (sink type)	-	
	EH-YT64	64 pts., Transistor, 12 / 24 V DC (sink type)	CE, UL, RCM	Electric short circuit protection
	EH-YTP64	64 pts., Transistor, 12 / 24 V DC (source type)	CE, UL, RCM	
	EH-YS16	16 pts., Triac, 100 / 240 V AC	CE, RCM	*3, *4

Table 3.2 List of system equipment (2/2)

Product	Model name	Specification	Standard compliant	Remarks
TTL input output module	EH-MTT32	Input 16 pts., Output 16 pts., 4 to 27 V DC Compatible connector with PHM-TT	CE	
	EH-MTT32A	16 pts., 3 to 15 V DC input (sink type) 16 pts., 4 to 15 V DC output (sink type)	-	
Analog input module	EH-AX44	12 bits, 8 ch. (4 ch. of 4 to 20 mA, 4 ch. of 0 to 10 V)	CE, UL, RCM	*3
	EH-AX8V	12 bits, 8 ch., Voltage (0 to 10 V)	CE, UL, RCM	*3
	EH-AX8H	12 bits, 8 ch., Voltage (-10 to +10 V)	CE, UL, RCM	*3
	EH-AX8I	12 bits, 8 ch., Current (4 to 20 mA)	CE, UL, RCM	*3
	EH-AX8IO	12 bits, 8 ch., Current (0 to 22 mA)	CE, UL, RCM	*3
	EH-AXH8M	14 bits, 8 ch. (0 to 22 mA, 4 to 22 mA, -10 to +10 V, 0 to 10 V)	CE, UL, RCM	*3
	EH-AXG5M	12 / 16 bits, 5 ch. (0 to 22 mA, 4 to 22 mA, -10 to +10 V, 0 to 10 V), Galvanic isolation between channels	CE, RCM	*3
	EH-PT4	Signed 15 bits, 4 ch. Resistance Temperature Detector input, PT100 / PT1000	CE, UL, RCM	*3
	EH-RTD8	Signed 15 bits, 6 ch. (3-wire) / 8 ch. (2-wire) Resistance Temperature Detector input, PT100 / PT1000	CE, RCM	*3
	EH-TC8	Signed 15 bits, 8 ch. Thermocouple input (K,E,J,T,B,R,S,N)	CE, UL, RCM	*3
Analog output module	EH-AY22	12 bits, 4 ch. (2 ch. of 4 to 20 mA, 2 ch. of 0 to 10 V)	CE, UL, RCM	*3
	EH-AY2H	12 bits, 2 ch., Voltage (-10 to +10 V)	CE, UL, RCM	*3
	EH-AY4V	12 bits, 4 ch., Voltage (0 to 10 V)	CE, UL, RCM	*3
	EH-AY4H	12 bits, 4 ch., Voltage (-10 to +10 V)	CE, UL, RCM	*3
	EH-AY4I	12 bits, 4 ch., Current (4 to 20 mA)	CE, UL, RCM	*3
	EH-AYH8M	14 bits, 8 ch. (0 to 22 mA, 4 to 22 mA, 0 to 10 V)	CE, UL, RCM	*3
	EH-AYG4M	12 / 16 bits, 4 ch. (0 to 22 mA, 4 to 22 mA, 0 to 10 V, -10 to +10 V), Galvanic isolation between channels	CE, RCM	*3
Positioning and counter module	EH-CU	2 channels high-speed counter input, Maximum frequency of 100 kHz, 1/2-phases switchover, 4-point opened collector output	CE, UL, RCM	
	EH-CUE	1 channel high-speed counter input, Maximum frequency of 100 kHz, 1/2-phases switchover, 2-point opened collector output	CE, UL, RCM	
	EH-POS	1-axis pulse positioning module	UL, RCM	Discontinued
Communication and network module	EH-SIO	Serial interface module, RS-232C, RS-422 / RS-485	CE, UL, RCM	
	EH-RMP2	PROFIBUS-DP master module, 512 / 512 words I/O	CE, RCM	8 units per CPU
	EH-IOCP2	PROFIBUS-DP slave controller, 1,408 points(176 words) I/O	CE, RCM	*1
	EH-RMD2	DeviceNet master module, 256 / 256 words I/O	CE	
	EH-IOCD2	DeviceNet slave controller, 1,408 points(176 words) I/O	CE	*1
	EH-IOCA	EterCAT slave controller, 1408 points (176 words) I/O	CE, RCM	*1
	EH-LNK	CPU link module (coaxial)	RCM	8 units per CPU
	EH-OLNK	CPU link module (optical fiber)	UL, RCM	8 units per CPU
	EH-OLNKG	CPU link module (support optical fiber GI50 / 125 μm cable)	UL, RCM	8 units per CPU
	EH-OLNKE	CPU link module (support optical fiber GI62.5 / 125 μm cable)	UL, RCM	8 units per CPU
	EH-FLN3	FL-net interface module	CE, UL, RCM	2 units per CPU
Dummy module	EH-DUM	Module for an opened slot	CE, UL, RCM	

*1 CPUs, power modules and I/O controllers (EH-IOCH2, EH-IOCP2, EH-IOCA) are mounted on reserved positions only.
*2 Short circuit protection version is from May 2001 production. (MFG. No. 01Exx)
*3 The suggested torque for the terminal connections is 9 in-lbs as below.

Cable for wiring			Torque to tighten the terminal
Wire Size	Material	Type	
22 - 14 AWG	Cu	Sol / Str.	9 in.-lbs (1.02 Nm)

*4 Supporting module version is from April 2005 production. (MFG. No. 05Dxx)
*5 Please use the maximum output current of EH-PSR on the following conditions.
Less than 45 degree ambient temperature: 5.6 A
From 45 to 55 degree ambient temperature: 5.0 A

[Installation rule]

- EH-(O)LNK, EH-RMP2, EH-RMD2 can be mounted up to 8 units per CPU. Available position is from slot 0 to 7 of basic base only.

- EH-FLN3 can be mounted up to 2 units per CPU. Available position is from 0 to 7 of basic base only.

⚠ Caution

The system of HX-CPU supports a maximum of 11 modules per base units. However, the number of modules which can be provided depends on the maximum output current of the power module. Make sure to use HX-CPU in a permissible level of the maximum output current of the power module. Please refer to section 3.3 for list of current consumption.

(2) Peripheral devices

Table 3.3 Peripheral device of HX series

Product	Model name	Specification	Remarks
HX-CODESYS	HX-CDS	IEC 61131-3 compliant programming software with ST (Structured Text), SFC (Sequential Function Chart), FBD (Function Block Diagram), LD (Ladder Logic Diagram) and IL (Instruction List). Multilingual support (Japanese, English, German, Spanish, French, Italy, Russian, Chinese)	-

* Please refer to "Software manual of HX series" for the PC operating environment necessary to use it.

(3) Connection cable

Table 3.4 Connection cables of HX series

Product	Model name	Specification
Cable for connecting basic base I/O controller *1	EH-CB05A	0.5 m (1.64 ft.) length (basic to expansion and expansion to expansion)
	EH-CB10A	1 m (3.28 ft.) length (basic to expansion and expansion to expansion)
	EH-CB20A	2 m (6.56 ft.) length (basic to expansion and expansion to expansion)
Cable for 32 / 64-points I/O module (Both edges connector type)	EH-CBM01W	1 m (3.28 ft.) length (32 / 64-points I/O module to terminal block adaptor)
	EH-CBM03W	3 m (9.84 ft.) length (32 / 64-points I/O module to terminal block adaptor)
	EH-CBM05W	5 m (16.4 ft.) length (32 / 64-points I/O module to terminal block adaptor)
	EH-CBM10W	10 m (32.8 ft.) length (32 / 64-points I/O module to terminal block adaptor)
Cable for 32 / 64-points I/O module (One edges connector type)	EH-CBM01	1 m (3.28 ft.) length (32 / 64-points I/O module to external equipments)
	EH-CBM03	3 m (9.84 ft.) length (32 / 64-points I/O module to external equipments)
	EH-CBM05	5 m (16.4 ft.) length (32 / 64-points I/O module to external equipments)
	EH-CBM10	10 m (32.8 ft.) length (32 / 64-points I/O module to external equipments)
Cable for counter input module	EH-CUC01	1 m (3.28 ft.) length (Counter input module to external equipments)
	EH-CUC02	2 m (6.56 ft.) length (Counter input module to external equipments)
	EH-CUC03	3 m (9.84 ft.) length (Counter input module to external equipments)
	EH-CUC04	4 m (13.1 ft.) length (Counter input module to external equipments)
	EH-CUC05	5 m (16.4 ft.) length (Counter input module to external equipments)

*1 Use in a maximum of 2 m (6.56ft.) between stations, 8 m (26.24ft.) in total

(4) Optional product

Table 3.5 Optional product of HX series

Product	Type	Use	The life of battery (Total power failure time)	Remarks
Lithium battery	HX-BAT	The battery is to work real-time clock only.	Min. @55 °C 25,000 [Hr] Max. @25 °C 67,000 [Hr]	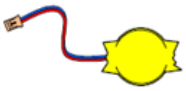

During the 8 days or more of a power cut, if the retention of realtime clock data is required, please use the Lithium battery. But even in the case of using real time clock, Battery is unnecessary when HX-CPU are always synchronized with NTP server. HX-CPU stores user program and data (retain and persistent) to a nonvolatile memory, so the battery is unnecessary for them. The durable life of the battery is 5 years. Even if the battery t is not a life, replace it every 5 years.

3.3 List of Current Consumption

Table 3.6 List of current consumption of modules

Product	Model name	Current consumption [mA]	Product	Model name	Current consumption [mA]
CPU module	HX-CP1S08	1,000	Digital output module	EH-YT32	90
	HX-CP1H16	1,200		EH-YTP32	90
	HX-CP1S08M	1,000		EH-YT32E	90
	HX-CP1H16M	1,200		EH-YTP32E	90
	HXC-CP1H16	1,200		EH-YT32H	90
I/O controller	EH-IOCH2	80		EH-YTT32	100
Base unit	EH-BS3A	200		EH-YT64	120
	EH-BS5A	200		EH-YTP64	120
	EH-BS6A	200		EH-YS16	250
	EH-BS8A	200	TTL input output module	EH-MTT32	140
	EH-BS11A	200		EH-MTT32A	90
	EH-BS8R	200	Analog input module	EH-AX44	100
Digital input module	EH-XD8	30		EH-AX8V	100
	EH-XD16	50		EH-AX8H	100
	EH-XDL16	50		EH-AX8I	100
	EH-XDA16	50		EH-AX8IO	100
	EH-XDS16	50		EH-AXH8M	70
	EH-XD32	60		EH-AXG5M	300
	EH-XDL32	60		EH-PT4	160
	EH-XD32E	60		EH-RTD8	300
	EH-XDL32E	60		EH-TC8	70
	EH-XD32H	60	Analog output module	EH-AY22	100
	EH-XDB32	60		EH-AY2H	100
	EH-XDBL32	60		EH-AY4V	100
	EH-XTT32	80		EH-AY4H	100
	EH-XD64	80		EH-AY4I	130
	EH-XDL64	80		EH-AYH8M	70
	EH-XDB64	80		EH-AYG4M	730
	EH-XDBL64	80	Positioning, and Counter module	EH-CU	310
	EH-XA16	50		EH-CUE	310
	EH-XAH16	50		EH-POS *2	300 (600)*1
Digital output module	EH-YR8B	220	Communication and network module	EH-SIO	250
	EH-YR12	40		EH-RMP2	780
	EH-YR16	430		EH-IOCP2	350
	EH-YR16D	430		EH-RMD2	300
	EH-YT8	30		EH-IOCD2	250
	EH-YTP8	30		EH-IOCA	350
	EH-YT16	50		EH-FLN3	350
	EH-YTP16	50		EH-LNK	550
	EH-YTA16	50		EH-OLNK	550
	EH-YTPA16	50		EH-OLNKG	550
	EH-YTP16S	50		EH-OLNKE	550
				EH-FLN3	350
			Dummy module	EH-DUM	0

*1 In the case of Positioner connected.

*2 Discontinued product

⚠ Caution

The system of HX-CPU supports a maximum of 11 modules per base units. However, the number of modules which can be provided depends on the maximum output current of the power module. Make sure to use HX-CPU in a permissible level of the maximum output current of the power module. Please refer to section 3.3 for list of current consumption.

MEMO

Chapter 4 CPU Module

4.1 Outline

Standard model / Motion model

Module features

Type	HX-CP1S08 / HX-CP1S08M
Weight	Approx. 0.20 kg (0.44 lb)
Current consumption	1,000 mA
Dimensions (mm (in.))	

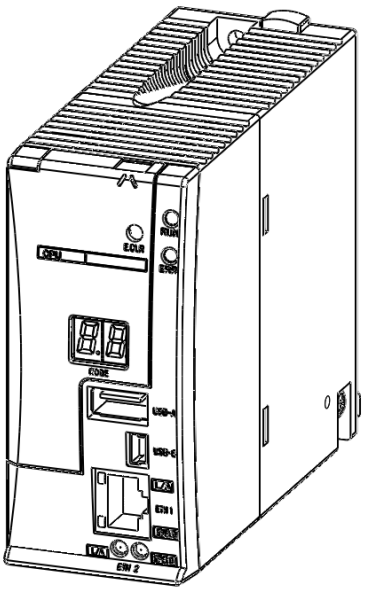

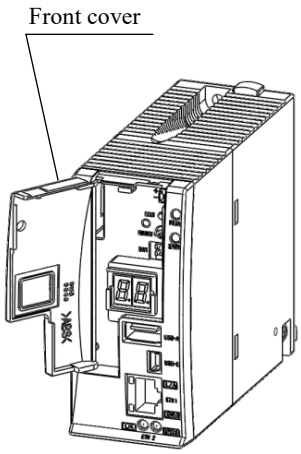

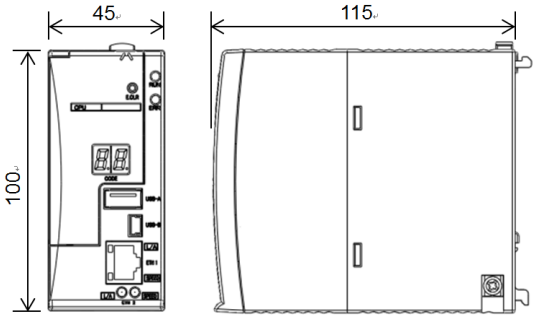

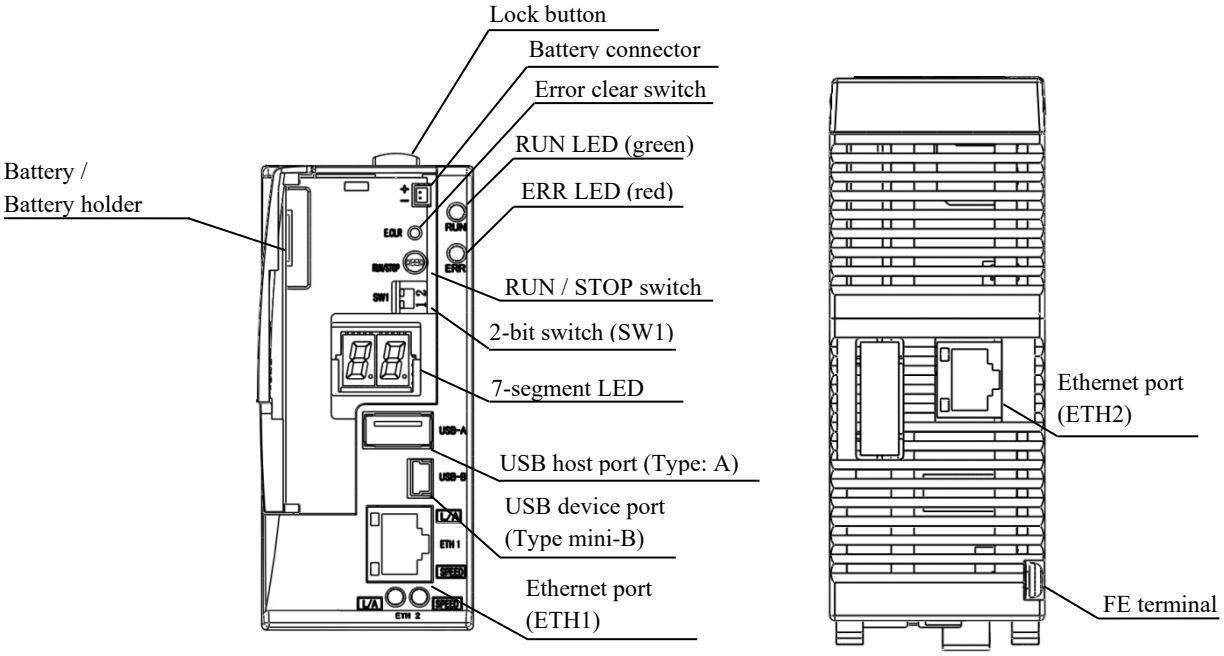

Front view

Bottom view

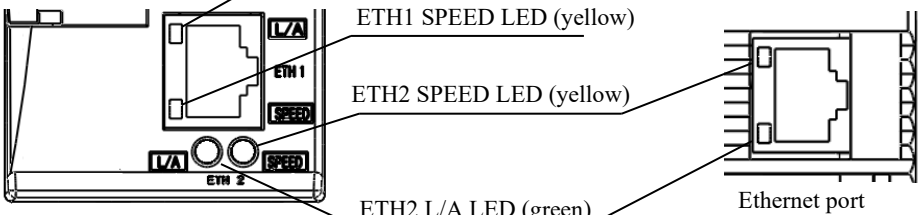

Detail of Ethernet port

Full function model / CNC motion model / Hybrid model

Module features

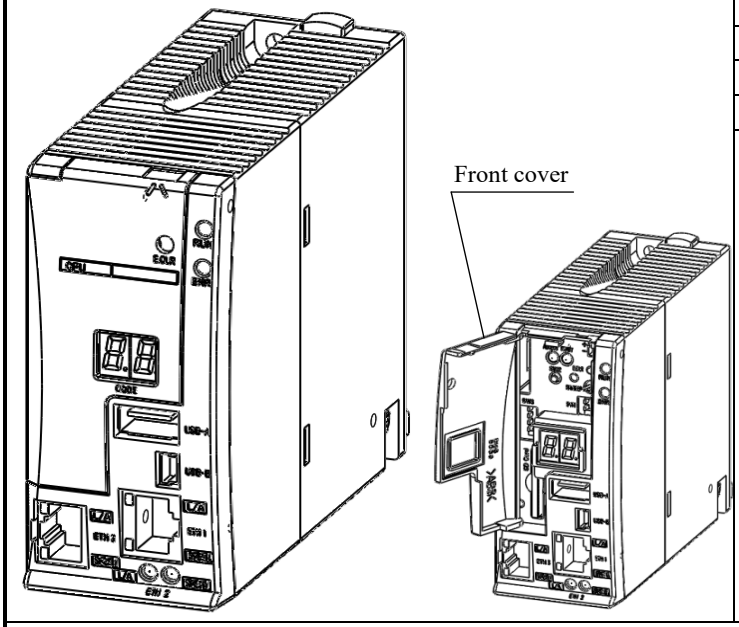

Type	HX-CP1H16 / HX-CP1H16M HXC-CP1H16
Weight	Approx. 0.24 kg (0.53 lb)
Current consumption	1,200 mA
Dimensions (mm (in.))	

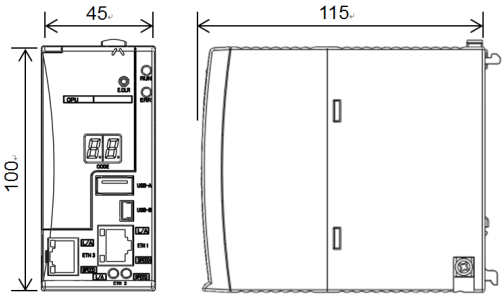

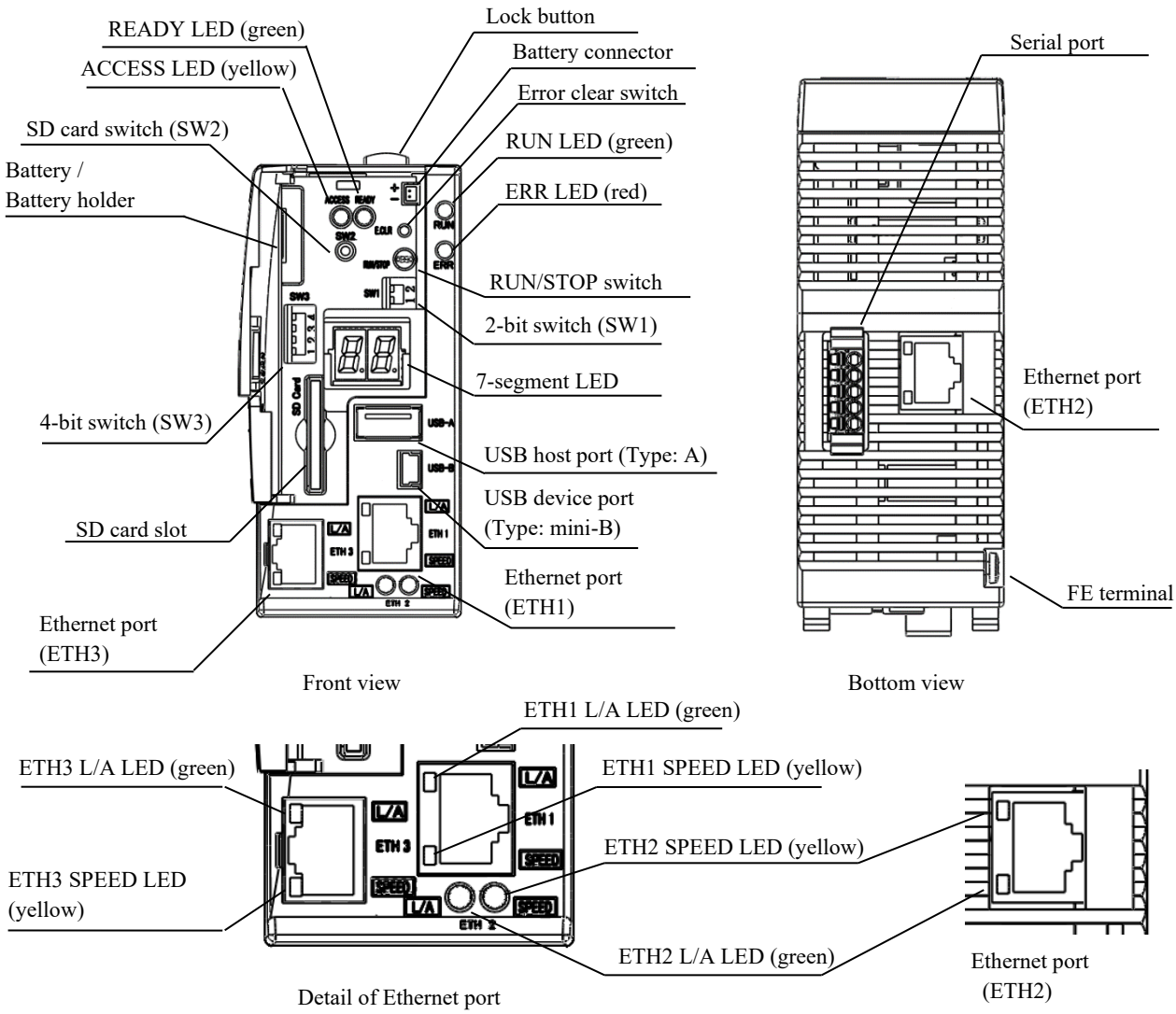

Table 4.1 Each description of items in CPU module

No.	Item	Description
1	RUN LED	Indicates operation status. (Green lighting: RUN / off: STOP)
2	ERR LED	Indicates error status. (Red blinking: battery error, I/O module mismatch or initialization of RTC (real time clock) etc. / red lighting: other errors / off: no error)
3	7-segment LED	Indicates error code. And indicates the status of the USB memory with dot LED "." on the right. (Lighting: mounting, Blinking: accessing *1, Off: unmount) 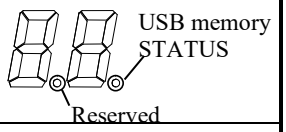
4	USB host port (Type:A)	USB host function (Data logging) is supported. User program is needed to use data logging (File read / write / compare). Support device is USB memory only.
5	USB device port (Type:mini-B)	USB port supports gateway function (with HX-CODESYS) only. USB cable is not included with CPU package nor supplied by Hitachi-IES. Use type Mini-B USB cable.
6	Serial port (Full function model)	Serial communication port has an RS-485 interface with terminal. It is supporting Modbus (master / slave) and general purpose. User program is needed to use general purpose.
7	Ethernet port (ETH 1,2)	Ethernet port 1, 2 are available for gateway function (with HX-CODESYS / HMI / OPC), global network variable and Ethernet communication which is described in Functional specification list. Do not use other functions if EtherCAT master or EtherNet/IP scanner function is used.
8	Ethernet port (ETH 3) (Full function model)	Ethernet port 3 is available for gateway function (with HX-CODESYS / HMI / OPC), global network variable and Ethernet communication which is described in Functional specification list except EtherCAT master and EtherNet/IP scanner function.
9	SD card slot (Full function model)	SD / SDHC card are supported. Data logging function is supported. User program is needed to use data logging (File read / write / compare).
10	RUN / STOP switch	When this switch position is in RUN (left), CPU start executing program. At the same time, remote controlling is enabled, in which case, CPU is started or stopped by HX-CODESYS over communication. When this switch position is in STOP (right), CPU stop executing program. In this status, remote controlling is disabled.
11	Error clear switch (E.CLR)	If any error occurs, error code is displayed in 7-segment LED and remains after the error cause is deactivated. When pressing this button, error code is cleared. If the error cause is still remaining, error code will be displayed again.
12	SD card switch(SW2) (Full function model)	When pressing this switch, SD card is unmounted. Please check lights-out of READY LED before pull out SD card.
13	ACCESS LED (Full function model)	Blinks while the system is reading or writing to SD. *1
14	READY LED (Full function model)	Indicates the status of SD card. Do not pull out SD card during lighting. (Green lighting: mounting, Off: unmount)
15	SPEED LED	Indicates communication speed of each Ethernet port. (Yellow lighting: 100Mbps, Off: 10Mbps or link-down)
16	L/A LED	Indicates the status of each Ethernet communication. (Green lighting: Ethernet link-up, blinking: Data is sent or received, off: link-down)
17	2-bit switch (SW1)	Resetting the factory default settings. Please refer to section 13.2.
18	4-bit switch (SW3) (Full function model)	Not supported. Please keep off.
19	Lock button	Press this button to dismount from the base units. Module can be fixed firmly by a screw of M4×10mm (0.39 in.).
20	Front cover	Open this cover when operating the switch, button or replacing the battery. Keep the cover closed while CPU execute program.
21	Battery holder Battery connector	RTC (real time clock) data is retained by battery. Data specified as RETAIN and PERSISTENT and user program are retained without battery. -The battery has polarity. When plugging in, check the polarity carefully. -The battery is not included with CPU package. -Replace the battery every five years even when doesn't reach the end of the battery.
22	FE terminal	Connect to Class D grounding.

*1 This is supported on CPU Software version 3.5.16.22 or newer.

⚠ Caution

Note the cautions for the communication ports.
Since EtherCAT supports 100 Mbps only, communication error might occur depending on installation environment, cable length or external noise. In this case, check your installation environments and take appropriate countermeasures to reduce noise.

4.2 Functional Specifications

Table 4.2 Functional specifications

Item		Specifications				
		HX-CP1S08	HX-CP1S08M	HX-CP1H16	HX-CP1H16M	HXC-CP1H16
Model		Standard	Motion	Full Function	CNC Motion	Hybrid
User program memory *1*2		8 MB		16 MB		
Source file memory *1*2		8 MB		16 MB *3		
Data memory (non-retain) *1		8 MB		16 MB		
Data memory (retain) *1		250 KB				1024 KB
Data memory (persistent) *1		250 KB				1024 KB
Field bus / Marker memory		48 KB				
Number of expansion base units		5 units				
Expansion cables		Between stations: 0.5 m, 1 m, 2 m Total length: Max. 8 m				
Number of I/O points (using 64 points module)		4,224 points				
I/O modules		Same as EH-150 / EHV series				
PLC programming language		IEC61131-3 compliant 5 languages + CFC LD: Ladder Diagram IL: Instruction List FBD: Function Block Diagram ST: Structured Text SFC: Sequential Function Chart CFC: Continuous Function Chart				
C program	Adaptation of C / C++ program	-				✓
	Data sharing	-				✓
	Web server for application management	-				✓
I/O update cycle		Refresh processing				
Execution speed	Boolean instruction	min. 1.0 ns				
	Double-precision floating point	min. 6.6 ns				
Library	PLC standard library	✓				
	SM3_Basic (for motion)	-	✓	-	✓	-
	SM3_Robotics (for motion)	-			✓	-
	SM3_CNC (for motion)	-			✓	-
Available communication	OPC UA Server	✓				
	Web Visualization	-		✓		
	NTP (network time protocol)	✓				
	DNS Client *8	✓				
	FTP Server	✓				
	FTP Client *8	✓				
	EtherCAT Master *4	✓ (Port: ETH1 / ETH2, Communication cycle: Min. 1 ms)				
	Redundancy EtherCAT *8	✓				
	EtherNet/IP Scanner*9	✓				
	Modbus-TCP Client	✓				
	Modbus-TCP Server	✓ The maximum number of Modbus-TCP client: 16				
	Modbus-RTU Master	✓ *10		✓		
	Modbus-ASCII Master	✓ *10		✓		
	Modbus-RTU Slave	-		✓		
	Modbus-TCP / RTU Gateway *9	✓ *10		✓		
Communication interface	Ethernet	2 ports (10/100BASE-T/TX)		3 ports (10/100BASE-T/TX)		
	Hardening *5	✓				
	Certification / Cryptograph *5	-				✓ (ETH3)
	Serial	-		1 port (RS-485)		
	USB device	1 port (Mini-B type connector, USB 2.0 High speed)				
External storage	USB host *6	1 port (A type connector, USB 2.0 High speed) for USB memory				
	SD memory card slot *6	-		1 slot (SD / SDHC)		
Display and switch	Display	RUN LED, ERR LED, 7-segment LED (2 digits)				
	RUN / STOP switch	STOP / RUN (Remote control of RUN / STOP over communication from HX-CODESYS is enable when switch position is in RUN.)				
	Error clear switch	Clear of error code				
	2-bit switch (SW1)	Reset the factory default settings				
	4-bit switch (SW3)	-		Reserved for future		

Table 4.2 Functional specifications

Item	Specifications				
	HX-CP1S08	HX-CP1S08M	HX-CP1H16	HX-CP1H16M	HXC-CP1H16
Model	Standard	Motion	Full Function	CNC Motion	Hybrid
Real-time clock	Built-in RTC (deviation ±60 s / month at 25 °C)				
Battery (Option for RTC)	HX-BAT (for RTC)				
Startup time *7	About 20 to 30 s				About 70s or more
Maintenance function	Self-diagnosis (microcomputer error, watchdog timer error, memory error, battery under-voltage detection, and others)				
Supported standards	UL/cUL, CE, RCM				UL/cUL, CE

*1 Since additional information needs to be saved, available memory size is slightly smaller than nominal value.
*2 The displayed size in File window of HX-CODESYS may exceed the specification because the stored data is compressed by the file system.
*3 Data for Web Visualization is stored in the source file memory.
*4 EtherCAT master function must be configured as stand alone. Do not configure other function with EtherCAT master function.
*5 The security protection support function of each system component is just one way to ensure a security level required for the system and does not mean that it completely protects the system from increasing security risks. To responsibly implement and maintain a necessary security level, continued improvement is required. You need to clarify the system security protection target and take necessary measures before building and operating the system.
*6 File access is available on user program and FTP client.
*7 Depends on the size of the user program.
*8 Supported on CPU firmware version 3.5.13.40.
*9 Supported on CPU firmware version 3.5.16.22.
*10 EH-SIO module is needed.

Table 4.3 EtherCAT functional specifications

Item	Specification
Protocol	EtherCAT® protocol (CoE)
Supported communication profiles	CoE (PDO , SDO)
Synchronization (DC)	Supported
Physical layer	100BASE-TX
Modulation system	Baseband communication
Transmission speed	100 Mbps (100BASE-TX)
Duplex mode	Full duplex / Auto MDI
Topology	Daisy-chain, tree
Transmission medium	Twisted pair cable more over category 5 with shield
Transmission range	Max. 100 m between nodes (IEEE802.3)
Maximum number of slaves	255
Maximum process data size	Input 5,736 bytes / Output 5,736 bytes
Maximum data size of slave	Input 1,434 bytes / Output 1,434 bytes
Maximum massage size	2,048 bytes
Communication cycle time	Min. 1 ms
Process data communication	・PDO Mapping with the CoE protocol ・Redundant communication even in a slave malfunction ・Stop operation in a slave malfunction
SDO communication	CoE ・Emergency message server (receive from slave) ・SDO request / Response
Configuration	・Setting node address by network scan from programming tool (HX-CODESYS) ・Display of network information
RAS function	・Slave configuration check in the network starting ・Read-out of the error information ・Trouble shoot information
Slave information	・Slave valid / invalid ・joining / out-network of a slave (Slave option)
Mail box	・CoE (CAN open / CAN application layer over EtherCAT)
Redundancy	Available on the CPU firmware version 3.5.13.40 or newer

Table 4.4 Programming functional specifications

Item			Specification
Task Specifi-cations	Number of periodic task		32
	periodic task priority		0 to 31
	Number of event task		8
	System event		25 kinds such as Run / Stop
	Number of status task		8
	Number of freewheeling task		1
Kinds of POU			Program, Function block, Function
Data Types	Bool		BOOL, BYTE, WORD, DWORD, LWORD
	Integer		SINT, INT, DINT, LINT
	Unsigned integer		USINT, UINT, UDINT, ULINT
	Real		REAL, LREAL
	String		STRING, WSTRING
	Time		TIME (T), LTIME (LT)
	Date / time of day		TIME_OF_DAY (TOD), DATE_AND_TIME (DT), DATE (D)
	Others		STRUCT, UNION, ARRAY, ENUMERATION, SUBRANGE, REFERENCE, POINTER, ANY, BIT
	Array number of dimensions		3
Instructions	Arithmetic instructions		ADD, MUL, SUB, DIV, MOD, MOVE
	Boolean instructions		AND, OR, XOR, NOT
	Bit shift		SHL, SHR, ROL, ROR
	Selection		SEL, MAX, MIN, LIMIT, MUX
	Comparison		GT, LT, LE, GE, EQ, NE
	Call		CAL
	Type conversion		BOOL_TO_INT, WORD_TO_INT, and so on
	Arithmetic Functions		ABS, SQRT, LN, LOG, EXP, SIN, COS, TAN, ASIN, ACOS, ATAN, EXPT
	IEC extension		DELETE, ISVALIDREF, NEW, QUERYINTERFACE, QUERYPOINTER, AND_THEN, OR_ELSE, TRY, CATCH, FINALLY, ENDTRY, INDEXOF, ADR, BITADR, INDEXOF, SIZEOF, ANDN, ORN, XORN
Standard library	Flip-Flop		RS, SR
	Counter		CTD, CTU, CTUD
	STRING Functions		CONCAT, DELETE, FIND, INSERT, LEFT, LEN, MID, REPLACE, RIGHT
	Timer		TOF, TON, TP
	Edge Detection		F_TRIG, R_TRIG
	Others		RTC
Other library (extract)	UTIL	BCD Conversions	BCD_TO_INT, INT_TO_BCD
		Bit / Byte Functions	EXTRACT, PACK, PUTBIT, UNPACK
		Mathematic Auxiliary Functions	DEREVATIVE, INTEGRAM LIN_TRAFO, STATISTICS_INT, STATISTICS_REAL,VARIANCE
		PID	PD, PID, PID_FIXCYCLE
		Signal Generators	BLINK, FREQ_MEASURE, GEN
		Function Manipulators	CHARCURVE, RAMP_INT, RAMP_REAL
		Analog Value Processing	HYSTERESIS, LIMITALARM
	FILE	Directory	DirClose, DirCreate, DirList, DirOpen, DirRemove, DirRename
		File	Close, Copy, Delet, EOF, Flush, GetAttribute, GetPos, GetSize, GetTime, Open, Read, Rename, SetPos, Write
	DTU		GetDateAndTime, SetDateAndTime

4.3 Ethernet Port Specifications

HX-CPU standard model and motion model have two Ethernet port (ETH1 / 2), and full function model, CNC motion model and Hybrid model have three Ethernet port (ETH1 / 2 / 3).

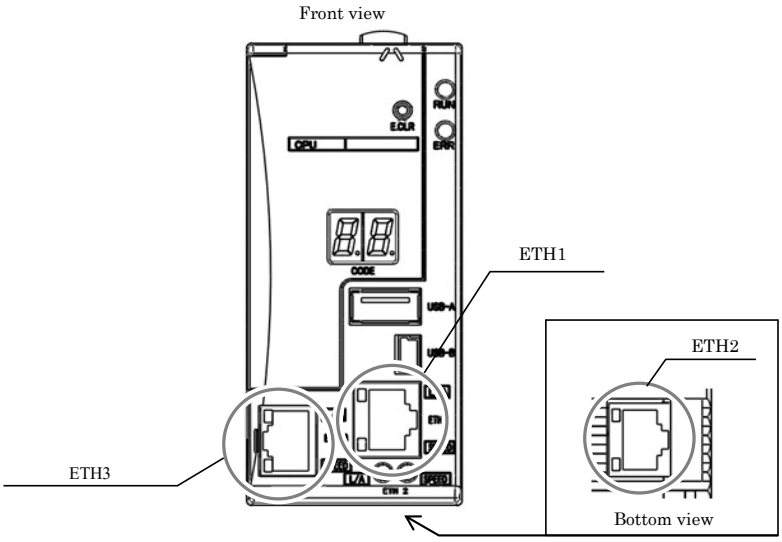

Figure 4.1 HX-CPU Ethernet port

(1) Supported communication function

Table 4.5 Supported function of Ethernet port

No.	Function	ETH1	ETH2	ETH3	Description
1	Gateway	✓	✓	✓	Max. 32 channels incl. HMI
2	Global network variable	✓	✓	✓	
3	OPC-UA Server	✓	✓	✓	
4	Web Visualization	✓	✓	✓	Full function / CNC motion / Hybrid model
5	NTP Client	✓	✓	✓	
6	FTP Server	✓	✓	✓	
7	FTP Client	✓	✓	✓	Supported on CPU firmware version 3.5.13.40
8	EtherCAT Master*1	✓	✓	-	
9	Modbus-TCP	✓	✓	✓	
10	Socket comm. (TCP/IP, UDP/IP)	✓	✓	✓	
11	EtherNet/IP Scanner*1	✓	✓	-	Supported on CPU firmware version 3.5.16.22

*1 Each port is available using more than one function at a time except EtherCAT master or EtherNet/IP scanner function. Do not configure the other function with EtherCAT master or EtherNet/IP scanner function.

(2) Ethernet port specification

Table 4.6 Ethernet port specification

Item	Specifications
Ethernet Standard	10BASE-T, 100BASE-TX
Transmission mode	AUTO (100 Mbps full, 100 Mbps half, 10 Mbps full, 10 Mbps half)
Modulation system	Baseband
Topology	Star
Transmission medium	Category 5 STP or UTP (STP recommended)
Maximum segment length	Max. 100 m between nodes
Connector	8-pin modular connector RJ45
Function	EtherCAT Master, Modbus-TCP Server / Client, FTP Server / Client, Network variable, CODESYS Gateway (TCP/IP, UDP/IP) , Socket Comm. (TCP/IP, UDP/IP), NTP, DNS, Web Visualization (HTTP / HTTPS), EtherNet/IP Scanner

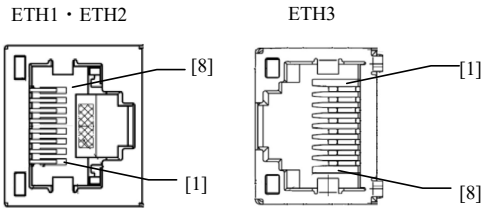

Pin No.	Signal name
1	TX+
2	TX-
3	RX+
4	NC
5	NC
6	RX-
7	NC
8	NC

Figure 4.2 HX-CPU Ethernet port connector pin assigned and signal name

(3) IP address default

Table 4.7 Default IP address of Ethernet port

	ETH1	ETH2	ETH3
Default IP address	192.168.0.1	192.168.1.1	192.168.2.1

(4) LED specification (ETH1 to 3)

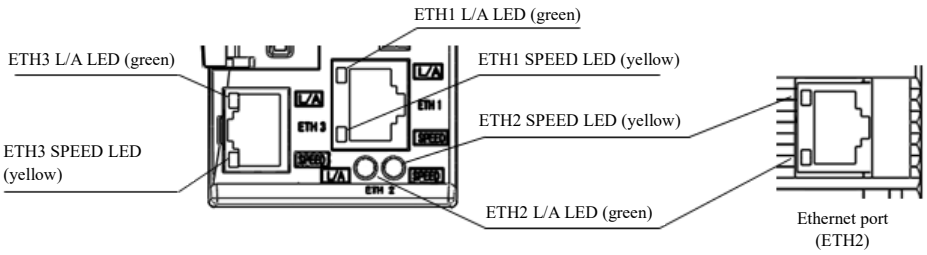

Figure 4.3 Ethernet communication port LED

Table 4.8 Ethernet port LED specification

LED	Color	Status	Remarks
L/A (Link / Activity)	Green	ON	LINK established
		Blinking	During communication
		OFF	Not connected or LINK unestablished
SPEED	Yellow	ON	100 Mbps
		OFF	10 Mbps

(5) Available receiving port No.

Table 4.9 Ethernet port No.

Port No. *1	Remarks
20	FTP server (Transmission data)
21	FTP server (control)
53	DNS client
123	NTP client (UDP/IP)
443, 8080	CODESYS Webserver (Web Visualization)
502	Modbus-TCP server
1202	Network variable (UDP/IP)
1217	Gateway communication (TCP/IP)
1740 to 1743	CODESYS gateway (UDP/IP)
2222, 44818	EtherNet/IP Scanner
4000 to 4007	CAA.NetBaseService Socket Comm. (UDP/IP and TCP/IP)
4840	CODESYS OPC-UA server
11740	CODESYS gateway (TCP/IP)

*1 The port number cannot be changed.

(6) OPC-UA server specifications

Table 4.10 OPC-UA specifications

Item	Specification
Supported version	1.03
Protocol	Binary protocol (opc.tcp)
Secure communication	3.5.13.41 or older: Not supported 3.5.16.22 or newer: Supported

4.4 USB Port Specifications

Front view

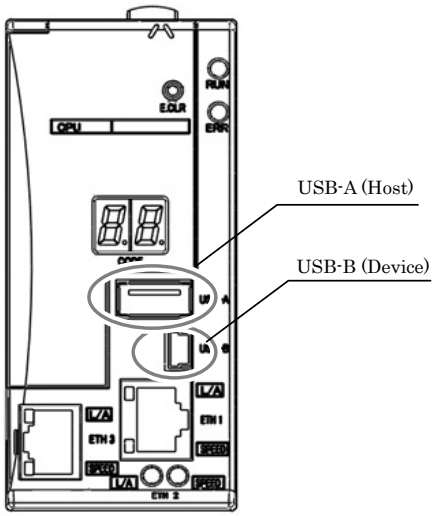

Figure 4.4 USB port

(1) USB-A (Host)

USB-A port is a USB host port for a USB memory. (Connector：Type-A)

It supports the data storage function. User program is required to handle files in the USB memory. Available device is USB memory only. Be sure to check environmental conditions of the USB memory and use it in the rated range. The specifications of the USB memory may be changed by the manufacturer, which could lead to unexpected behavior. Note the cautions described in the section 4.5 and be sure to test carefully in advance.

(2) USB-B (Device)

USB-B port supports a gateway (Connection with a HX-CODESYS) function. (Connector : Type-miniB) Use a standard USB cable with ferrite core in the market.

Table 4.11 USB port specification

Items		Specification
USB-A (Host)	Standard	USB 2.0 High Speed (480 Mbps)
	Connector	A type
	File system	FAT16, FAT32, ext2, ext3, ext4
	Maximum Volume	32 GB
	1 file maximum volume	2 GB
	Bus power	500 mA
	Distance	5 m
	Function	Access USB memory (Data logging, file operation, etc.)
USB-B (Device)	Standard	USB 2.0 High Speed (480 Mbps)
	Connector	mini-B type
	Distance	5 m
	Function	CODESYS gateway

4.5 SD Card Specifications

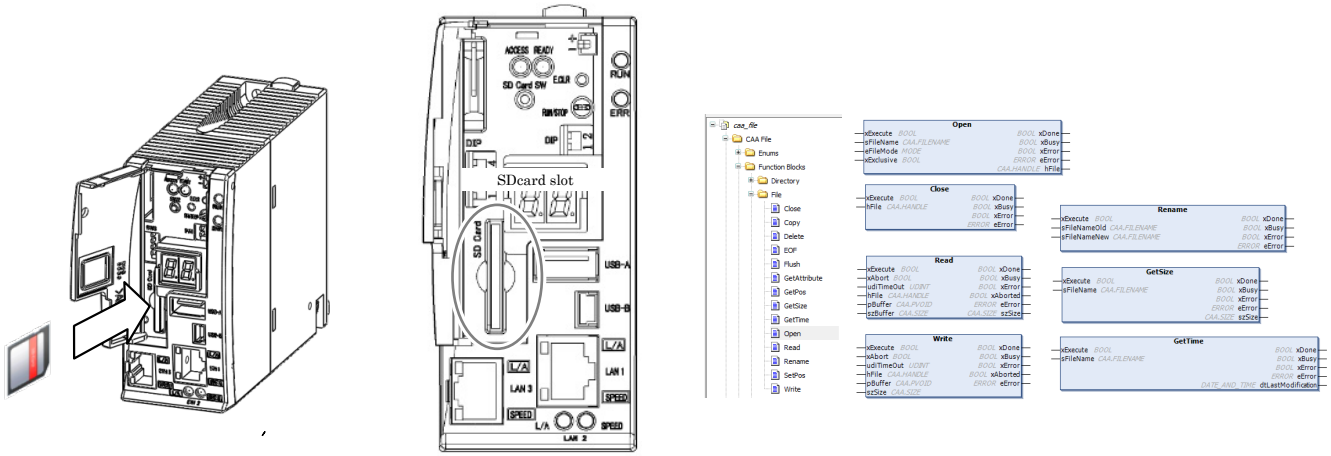

Figure 4.5 SD card

Full function model, CNC motion model and Hybrid model support a SD card. User program is required to handle files in the SD card. Be sure to check an environmental condition of the SD card and use it in the rated range. The specifications of the SD card memory may be changed by the manufacturer, which could lead to unexpected behavior. Note the cautions described below and be sure to test carefully in advance.

Table 4.12 SD card specification

Items		Specification
SD card	Standard	SD (up to 2 GB) , SDHC (2 to 32 GB)
	Bus interface	Normal speed, High speed
	Bus speed	Max. 25 MB/s
	Version	2.00
	File system	FAT16, FAT32, ext2, ext3, ext4
	Maximum volume	32 GB
	1 file maximum size	2 GB
	Function	Access SD card (Data logging, File operation, etc.)

Caution

Select a USB memory or SD card according to the purpose. There are several types of recording method on USB memory and SD card, mainly SLC (Single Level Cell), MLC (Multi Level Cell), TLC (Triple Level Cell). SLC is the most durable and reliable and followed by MLC and TLC in this order. However, the amount of data that can be stored in the device is the smallest for SLC. We recommend selecting the appropriate one in accordance with the importance of the data to be stored. The more frequently data is written or erased, the shorter the life of USB memory and SD cards are. When creating an application, design it to reduce the frequency of writing / erasing by buffering the memory in the HX-CPU.

There are cases that the file system of the USB memory or SD card corrupts by the unexpected power disconnection like instantaneous power interruption. In this case, formatting of USB memory / SD card is needed. Please use USB memory / SD card after formatting as journaling file system; ext3 or ext4 in order to avoid the corruption of the file system. Please use third-party software to handle ext3 / ext4 format device in Windows® because Windows® does not support these format as default.

4.6 Serial Port Specifications

Full function model, CNC motion model and Hybrid model has 2-wired RS-485 serial port. It supports Modbus-RTU master, Modbus-RTU slave, Modbus-ASCII master* and general communication.

Table 4.13 Serial port specification

items	Specification
Baud rate	4,800 bps, 9,600 bps, 19,200 bps, 38,400 bps, 57,600 bps, 115,200 bps
Interface	RS-485
Max. cable length	500 m
Max. number of devices	32
Communication mode	Half duplex
Synchronization method	Start-stop synchronization
Transmission method	Serial transmission (bit serial transmission)
Transmission format	7/8 bits, non/odd/even parity, 1/2 stop bit
Transmission sequence	Sent from the lowest bit
Error detection	Vertical parity check, sum check, overrun check, framing check
Max. message length	4,095 bytes (incl. control characters)
Protocol	General purpose, Modbus-RTU master, Modbus-RTU slave, Modbus-ASCII master*

* Supported on CPU firmware version 3.5.13.40

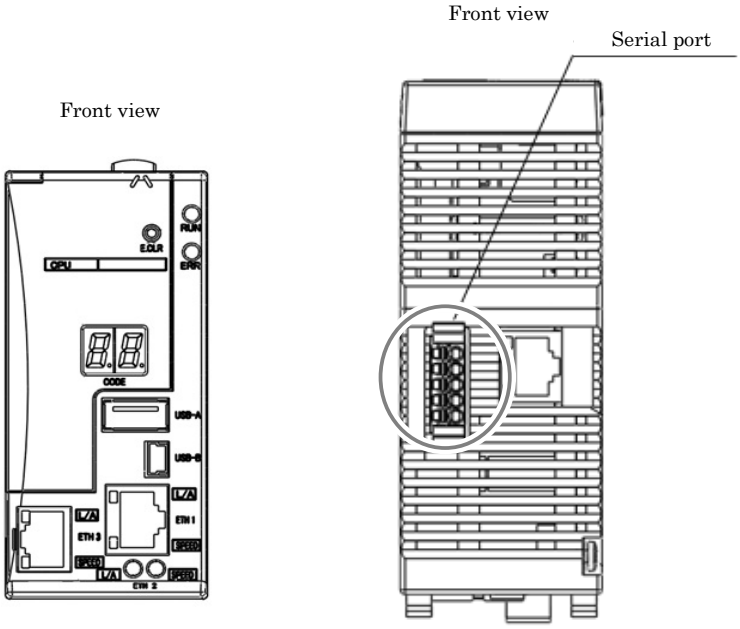

Figure 4.6 Serial communication port

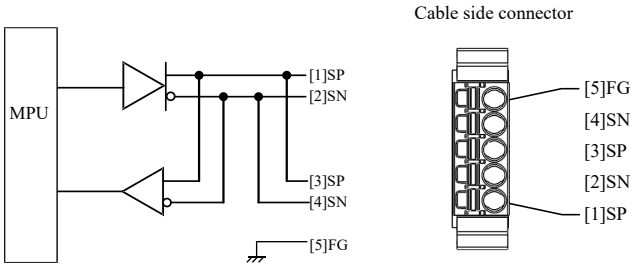

Pin no.	Signal	Silk	Description
5	FG	FG	Frame ground
4	SN	-	Transmitting data-
3	SP	+	Transmitting data+
2	SN	-	Transmitting data-
1	SP	+	Transmitting data+

Figure 4.7 Serial port Circuit and pin no.

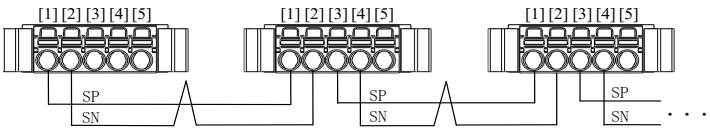

Figure 4.8 RS-485 signal connection diagram

Applicable cable is 0.2 mm^2 – 1.25 mm^2. (AWG 24 - 16)

Depending on the noise environment, connect the shielded wire to FG terminal. This terminal must not connect to ground.

If the HX-CPU is installed at the terminal of communication line, install a termination resistor. A resistor (120 Ω, 1 %, 1/4 W, metal film) is included in the package of HX-CPU.

4.7 Battery Specifications

The battery is optional and not included in the package. Use the battery in case of followings.

- Realtime clock is used and the data must be retained in 8 days or more of power failure time.
- Realtime clock is used and HX-CPU is used in ambient temperature 50 °C or more.

If realtime clock data is taken from NTP server, the battery is not necessary.

Battery is not required for user program and retained data memory because they are stored in nonvolatile memory.

Type : HX-BAT

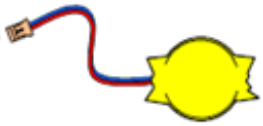

Figure 4.9 HX-CPU battery (option)

Follow the steps below to install the battery to HX-CPU. Be careful about the polarity of the battery.

How to install the battery

1] Prepare a new battery. (HX-BAT)

2] Keep power supplied to the PLC.

3] Remove the old battery from the battery case, and disconnect the cable plug.

4] Plug the cable of the new battery to the connector on the CPU module.

(Red cable to [+], black cable to [-])

5] Fold the excess cable and hook the cable guide.

(Otherwise, the cable may be nipped by the front cover.)

If replacing the battery without power supplied, power off time should be less than 30 minute.

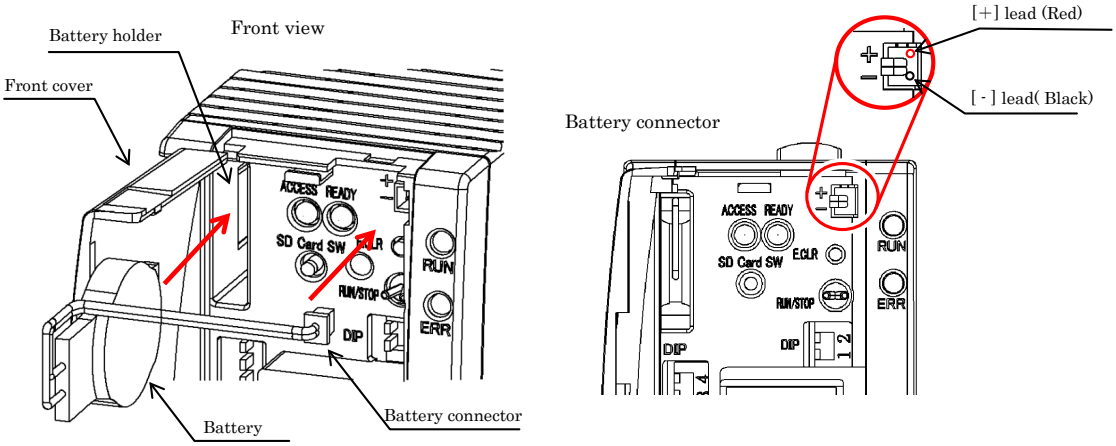

Figure 4.10 Install battery

Refer to the following tables for lifetime of the battery.

Table 4.14 Battery life

Battery life (Total time interruption of power supply) [Hr]	
Guaranteed value (MIN) @55 °C	Actual value (MAX) @25 °C
25,000	67,000

- When using the battery, enable the battery error detection. Refer to the manual section 2.6 Configuration of HX series application manual (Software).
- The life time of the battery means the total of power failure time.
- When ERR LED is displayed flashing or the 7-segment LED is displayed 71, replace the battery within 7 days.
- The durable life of the battery is 5 years. Even if the battery is not empty, replace it every 5 years.

DANGER

Precaution when handling the battery.

Use HX-BAT for the new battery. Be careful because a false replacement may cause the battery to explode. Do not connect + and - of the battery reversely, do not charge disassemble, heat them, throw them into the fire, short circuit them.

CAUTION

Disposal (collection) of the battery

Old battery should be individually put in plastic bag or something similar (to prevent short circuit) and follow your local recycling regulations.

Chapter 5 Power Supply, Base, I/O Controller

5.1 Power Supply Module

Name and function of each part	Type (Weight)	
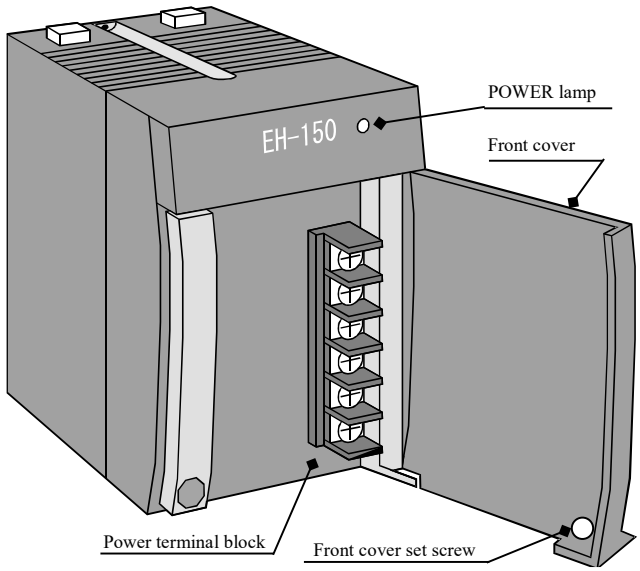		EH-PSA (Approx. 0.36 kg (0.79 lb))
		HX-PSA (Approx. 0.36 kg (0.79 lb))
		EH-PSD (Approx. 0.28 kg (0.62 lb))
		HX-PSD (Approx. 0.28 kg (0.62 lb))
		EH-PSR (Approx. 0.36 kg (0.79 lb))
	Dimensions (mm (in.))	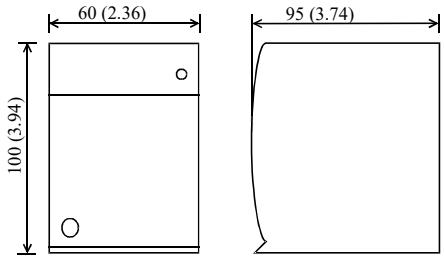

Explanation of function	Converts power supplied externally into the power (5 V DC) which can be used inside the HX-CPU. The operating status can be confirmed with the POWER lamp on the front of the module. There are two types of the external supply voltage, AC type (100 to 240 V AC) and DC type (21.6 to 26.4 V DC). And there is a redundant power supply that is using as large capacity power supply on the standard base. Refer to a specification table for details.

Name	Description	LED
POWER lamp	AC power supply: When the lamp lights up, indicates that the AC power is supplied. When the lamp is off, indicates that the AC power is not turned on or the output of the DC power short-circuits. When the lamp is flashing, indicates that the power has exceeded the rated output. DC power supply: When the lamp lights up, indicates that the DC power is supplied. When the lamp is off, indicates that the DC power is not turned on, the power output short-circuits, or there is a voltage overload. Redundant power supply: When the lamp lights up, indicates that the AC power is supplied. When the lamp is off, indicates that the AC power is not turned on or there is an error in power supply unit.	Green
Front cover / Front cover set screw	Open and close this cover when wiring cable. Keep the front cover closed during operation. Cut the power off first to avoid getting an electric shock when opening the cover. Use M3 × 6 mm (0.24 ft.) screws for the set screws if fixing is necessary.	
Power terminal block	This terminal block is used for output wiring of 24 V DC and for wiring of ground when the power is being supplied externally. The recommended crimp terminal is indicate below. 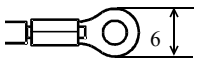 (Recommended) Take great care on handling the terminal because it may fall off if the screw is loose. Unit: mm 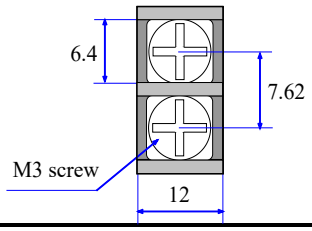	

(1) EH-PSA / HX-PSA

Item	Specification	
Rated output voltage	5 V DC	24 V DC
Maximum DC output current	3.8 A	0.4 A
Efficiency	Min. 65 % (Load of 5 V 3.8 A 24 V 0.4 A after conducting electricity for 5 minutes at room temperature and humidity)	
Input voltage range	85 to 264 V AC wide range	
Input current	Max. 1 A (85 to 264 V AC)	
Input rush current	Max. 50 A (Ta＝25 °C), Max. 100 A (Ta＝55 °C)	
Output overcurrent protection	Output short-circuit protection	
Instantaneous power failure guarantee	Less than 10 ms (85 to 100 V AC), less than 20 ms (Exceed 100 V AC to 264 V AC)	
Input leak current	Max. 3.5 mA (60 Hz, 264 V AC)	
Dielectric withstand voltage	1 minute at 1,500 V AC between (AC input) and (DC output) 1 minute at 750 V AC between (DC output) and (FE)	
Insulation resistance	Min. 20 MΩ (500 V DC) (1) Between AC input and FE (2) Between AC input and DC output	

Terminal configuration

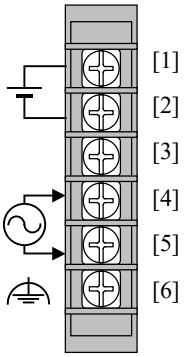

[1]	24 V DC+	Connect when using 24 V DC.
[2]	24 V DC−	
[3]	N.C.	Do not connect.
[4]	100 to 240 V AC	Connect the input power.
[5]	100 to 240 V AC	
[6]	FE	Connect to Class D grounding.

Diagram of internal circuit

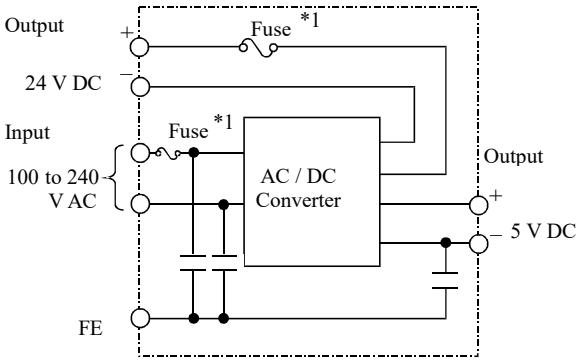

*1 The POWER lamp does not light up if a fuse blows. And the module needs repairs.
User cannot replace the fuse.

(2) EH-PSD / HX-PSD

Item	Specification
Rated output voltage	5 V DC
Maximum DC output current	3.8 A
Efficiency	Min. 70 % (Load at 5 V DC 3.8 A)
Input voltage range	21.6 to 26.4 V DC
Input current	Max. 1.25 A (with 24 V DC)
Input rush current	Max. 50 A (Ta＝25 °C), Max. 100 A (Ta＝55 °C)
Output overcurrent protection	Output short-circuit protection
Instantaneous power failure guarantee	Less than 1 ms (21.6 to 26.4 V DC)
Dielectric withstand voltage	1 minute at 1,500 V AC between DC input and FE
Insulation resistance	Min. 20 MΩ (500 V DC) (Between DC input and FE)
Insulation method	Non insulation

Terminal configuration

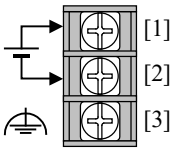

[1]	24 V DC+	Connect the input power.
[2]	24 V DC−	
[3]	FE	Connect to Class D grounding. Connect with 24 V DC(-) because of supporting CE marking.

Note
Be sure to remove the connection between FE and 24V DC(-) in the insulation resistance measurement and the dielectric withstand voltage test.

Diagram of internal circuit

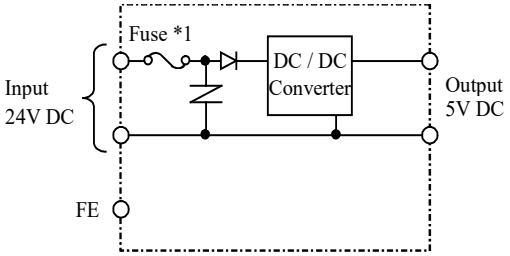

*1 The POWER lamp does not light up if a fuse blows. And the module needs repairs.
User cannot replace the fuse.

(3) EH-PSR

Item	Specifications
Rated output voltage	5 V DC
Maximum output current	5.6 A(up to 45 deg ambient temp), 5.0 A(from 45 to 55 deg)
Efficiency	Min. 65 % (Load of 5 V 5.6 A after energizing for 5 minutes at room temperature and humidity)
Input rated voltage range	85 to 264 V AC wide range
Input current	Max. 1 A (85 to 264 V AC)
Input rush current	Max. 50 A (Ta=25 °C), Max. 100 A (Ta=55 °C)
Output over current protection	Output short circuit protection
Instantaneous power failure guarantee	Less than 5 ms (85 to 100 V AC), less than 20 ms (100 to 264 V AC)
Input leak current	Max. 3.5 mA (60 Hz, 264 V AC)
Dielectric withstand voltage	1 minute at 1,500 V AC between (AC input) and (DC output) 1 minute at 750 V AC between (DC output) and (FE)
Insulation resistance	Min. 20 MΩ (500 V DC) (1) Between AC input and FE (2) Between AC input and DC output
Error output	Relay 24 V DC, 0.5A

Terminal configuration

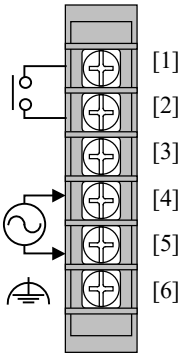

[1]	Error output	Relay contact for error output
[2]	Error output	
[3]	N.C.	Don't connect any wire.
[4]	100 to 240 V AC	Connect AC power
[5]	100 to 240 V AC	
[6]	FE	Connect to ground

Diagram of internal circuit

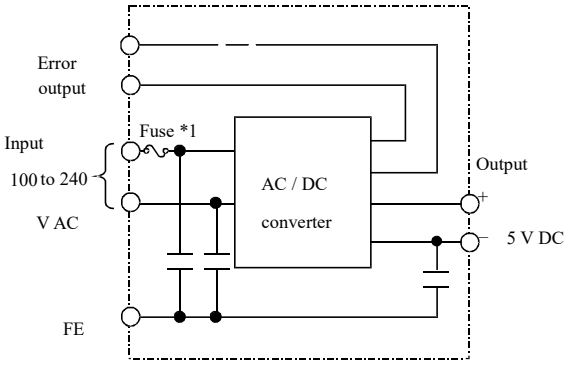

*1 When fuse was blown, the POWER lamp don't light. Also the module must repair by manufacture.
It is impossible to replace the blown flow by customer.

[Available combination]

Base・Power supply / CPU	EH-PSA / PSD			EH-PSR		
	EH-BS8R	EH-BS3A,5A,6A,8A	EH-BS11A	EH-BS8R	EH-BS3A,5A,6A,8A	EH-BS11A
HX-CPU	Not available *1	Available	Available	Available in redundant power supply system	Restricted use *2	Restricted use *2

*1 EH-PSA/PSD are not mounted in EH-BS8R. And it cannot monitor the operation status.
*2 Redundant power supply module (EH-PSR) is possible to use as large capacity power supply on the standard base. But it can not monitor the operation status.

[Monitor of operation status]

Combination of EH-PSR+HX-CPU, operation status can monitor as input data of slot A.

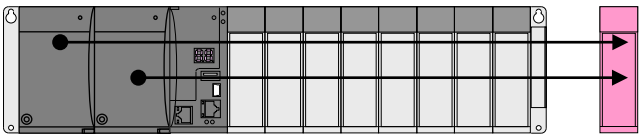

In EH-BS8R, 8 IO modules are available.
The status of power supply can monitor as input data of slot A.
Input %IX*.0 : power supply 0 operation is correct
Input %IX*.1 : power supply 1 operation is correct
"*" is variable depending on the mounting situations of the module.

5.2 Base Unit

(1) Standard base unit

Name and function of each part

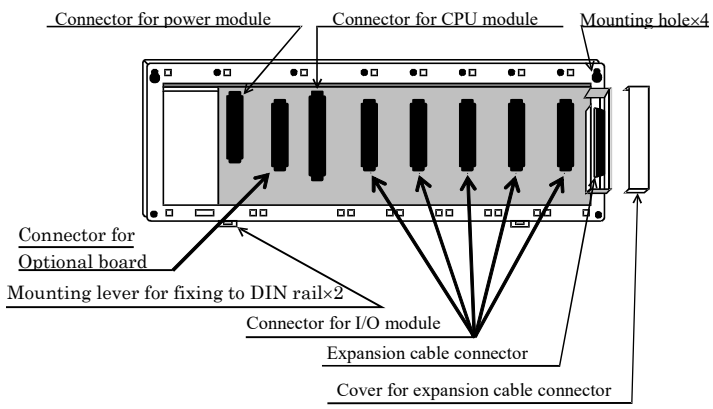

Communication slot (Slot for only communication module)

EH-BS3A	Slot 0 to 2
EH-BS5A	Slot 0 to 4
EH-BS6A	Slot 0 to 5
EH-BS8A	Slot 0 to 7
EH-BS11A	Slot 0 to 7 (Slot 8,9,A cannot install a communication module.)

Type (Weight)	EH-BS3A (Approx. 0.22 kg (0.48 lb))
	EH-BS5A (Approx. 0.28 kg (0.62 lb))
	EH-BS6A (Approx. 0.31 kg (0.68 lb))
	EH-BS8A (Approx. 0.36 kg (0.79 lb))
	EH-BS11A (Approx. 0.4 kg (0.88 lb))

Dimensions (mm (in.))

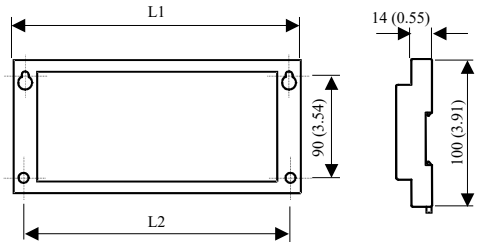

	L1 (Outer dimensions)	L2 (Mounted dimensions)
EH-BS3A	222.5(8.76)	207(8.15)
EH-BS5A	282.5(11.2)	267(10.51)
EH-BS6A	312.5(12.31)	297(10.70)
EH-BS8A	372.5(14.67)	357(14.06)
EH-BS11A	462.5(18.21)	447(17.6)

Explanation of function	This is a basic unit for installing all modules. Power is supplied from the power module to each of the other modules, using the base unit. Also, signals are transmitted to each module from the CPU module or the I/O controller. Select the base unit according to the number of I/O modules to be used.

Item	Description
Connector for power module	This is a connector for installing the power module.
Connector for Optional board	This connector is not used with HX-CPU.
Connector for CPU module	This is a connector for installing the CPU module. This becomes a connector for installing the I/O controller when using the unit as an expansion base.
Connector for I/O module	This is a connector for installing the I/O module.
Expansion cable connector	This is a connector for connecting the expansion cable.
Mounting hole (4 locations)	These are used when attaching the base unit to a panel, etc. Use M4×20 mm (0.79 in.) screws.
Mounting lever for fixing to DIN rail	This is used when mounting to a DIN rail.
Cover for expansion cable connector	This cover is used for protecting the expansion cable connector when it is not used.

(2) Redundant base unit

Name and function of each part	Type(Weight)	EH-BS8R (0.39 kg (0.86 lb))
	Dimension(mm (in.))	

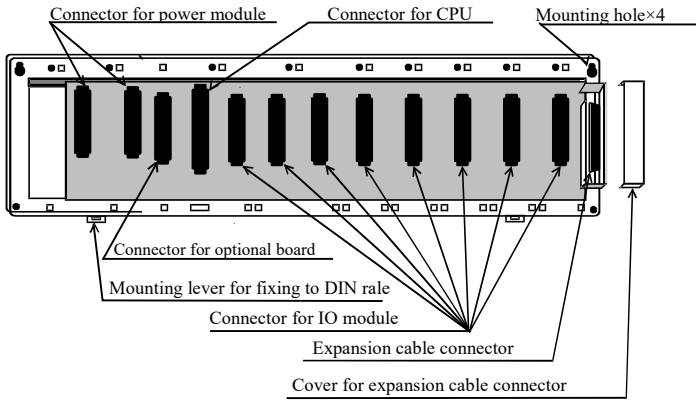

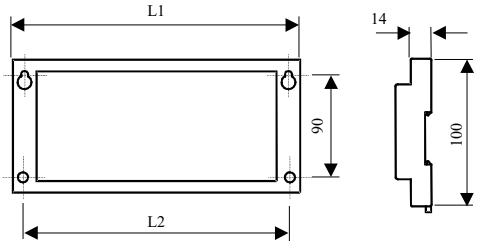

Communication slot

EH-BS8R	Slot 0 to 7

Unit:mm	L1 (Outer dimensions)	L2 (Mounted dimensions)
EH-BS8R	432.5(17.01)	417(16.42)

Function	This is a basic unit for installing all modules. Power is supplied from the power module to each of the other modules, using the base unit. Also, signals are transmitted to each module from the CPU module or the I/O controller.
Item	**Description**
Connector for power module	This is a connector for installing the power module.
Connector for Optional board	This connector is not used with HX-CPU.
Connector for CPU module	This is a connector for installing the CPU module. This becomes a connector for installing the I/O controller when using the unit as an expansion base.
Connector for I/O module	This is a connector for installing the I/O module.
Expansion cable connector	This is a connector for connecting the expansion cable.
Mounting hole (4 locations)	These are used when attaching the base unit to a panel, etc. Use M4×20 mm (0.79 in.) screws.
Mounting lever for fixing to DIN rail	This is used when mounting to a DIN rail.
Cover for expansion cable connector	This cover is used for protecting the expansion cable connector when it is not used.

[Error output, Operation status]

Error output and operation status will be change according to occurrence of error and power ON / OFF as follows.

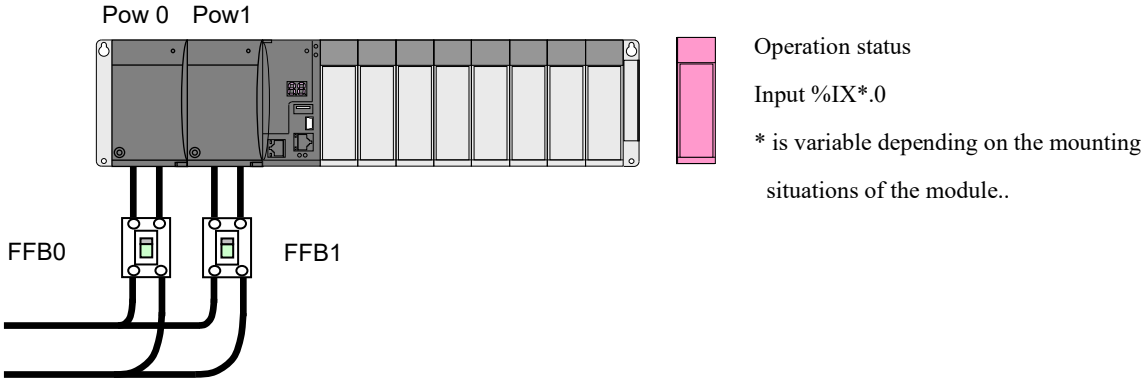

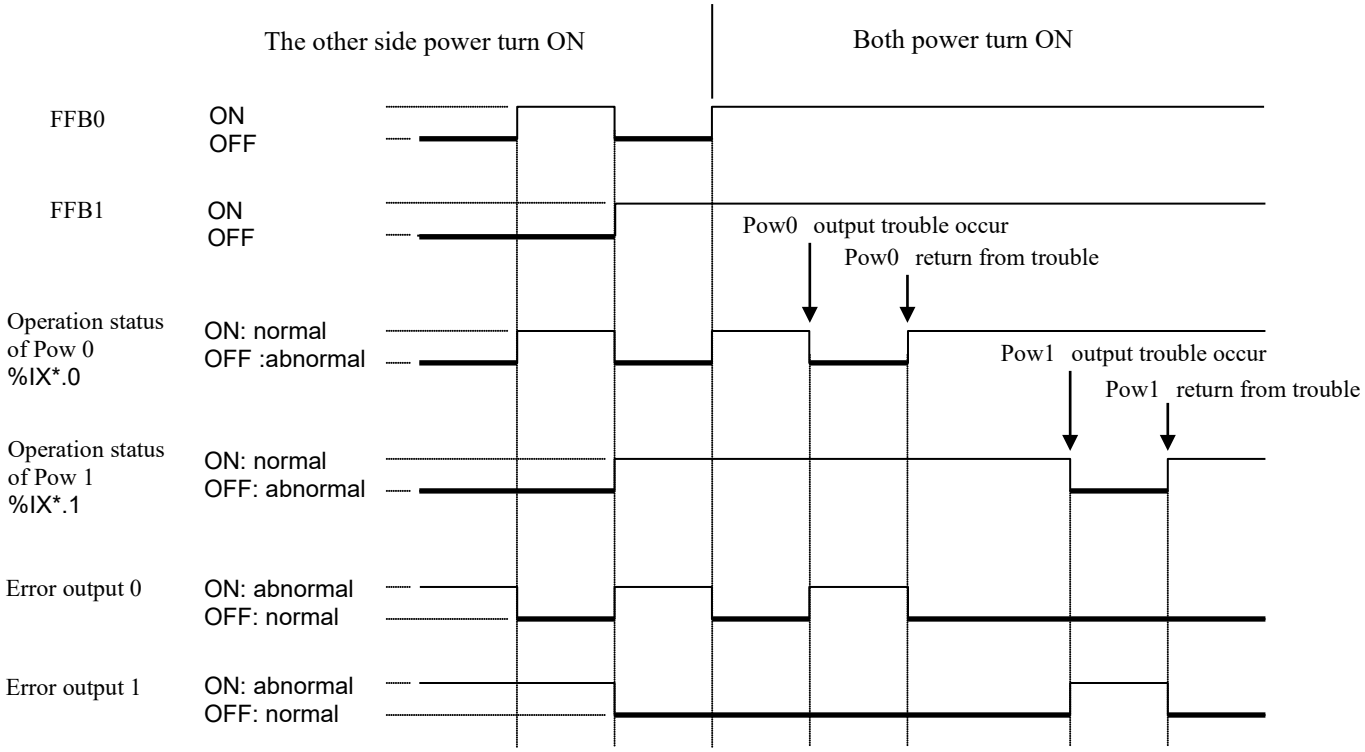

Time chart of Error output and Operation status

[Replacement of fault power supply module]

In case of fault the power supply module, it is possible to replace while operating another power supply module.

1. To easily replace the fault module, install the circuit breaker to each power line.
2. Please replace the fault module as the power off.
   Please attention the electric shock, because another power supply module is operating.

Please design the system of 5 V capacity is used as one power supply module when the redundant power supply.

5.3 I/O Controller

Name and function of each part	Type (Weight)	EH-IOCH2 (Approx 0.14 kg (0.31 lb))
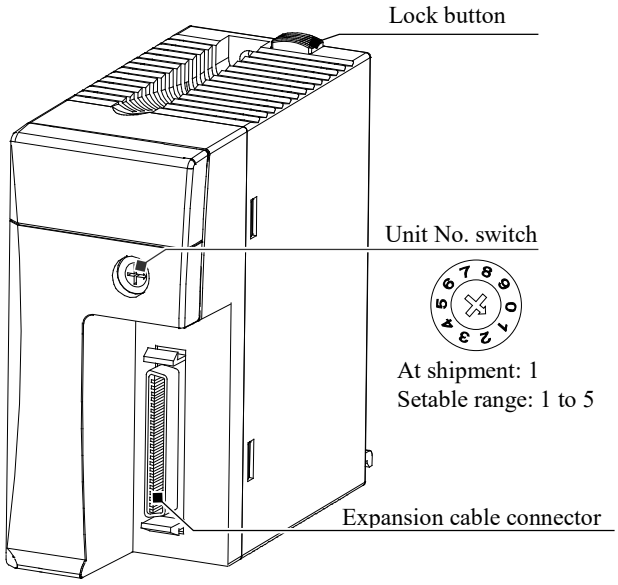	Dimensions (mm (in.))	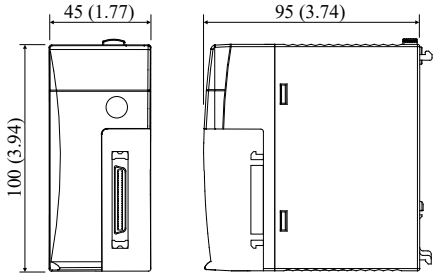

Explanation of function	I/O controller is a module to output the output signal from the CPU module to the output module mounted on the expansion base unit and to transmit the input signal of the input module to the CPU module. I/O controller is attached adjacent to the power module of the expansion base unit on the right side. For the unit No. switch, please set 1 to 5 from the unit closer to the CPU module in order. Note) - If other than 1 to 5 of the unit No. switch is set, it does not operate normally.

Item	Description
Lock button	Press this button to dismount. Module can be fixed firmly by a screw of M4 × 10 mm (0.39 in.).
Unit No. switch	This is a rotary switch for setting the unit No. Please set 1 to 5 from the unit closer to the CPU module in order. Example) 1 -> 2 -> 3, 2 -> 4 -> 5, 1 -> 3 -> 5 Always turns off the power supply when setting. Take care because it may operate abnormally if the unit No. is not set in order.
Expansion cable connector	This is a connector to connect an expansion cable. Connect with the former base unit using the expansion cable.

Chapter 6 Digital I/O Module

6.1 Outline

(1) The appearance of 16-point I/O module

Name and function of each part		
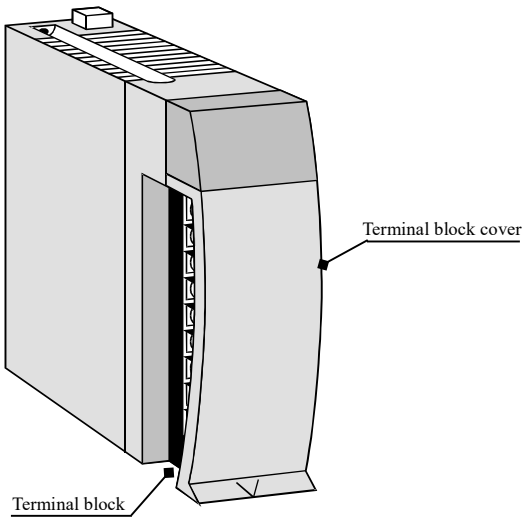	Type (Weight)	EH-XD8 (Approx.0.16 kg (0.35 lb))
		EH-XD16, EH-XDL16, EH-XDS16, EH-XDA16 (Approx.0.16 kg (0.35 lb))
		EH-XA16, EH-XAH16 (Approx.0.18 kg (0.41 lb))
		EH-YT8, EH-YTP8 (Approx.0.16 kg (0.35 lb))
		EH-YT16, EH-YTP16, EH-YTA16, EH-YTPA16, EH-YTP16S (Approx.0.16 kg (0.35 lb))
		EH-YR8B (Approx.0.16 kg (0.35 lb))
		EH-YR12 (Approx.0.20 kg (0.44 lb))
		EH-YR16, EH-YR16D (Approx.0.24 kg (0.53 lb))
		EH-YS16 (Approx.0.23 kg (0.51 lb))
	Dimensions (mm (in.))	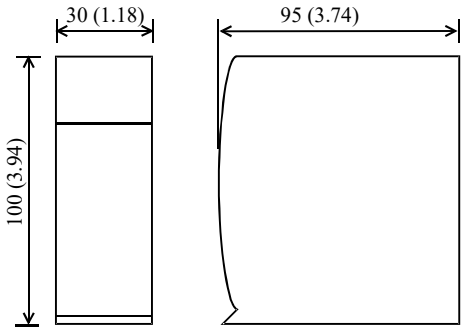

Name	Description
Terminal block	This is a terminal block for connecting the I/O signals. The terminal block can be connected and disconnected. The screws for the terminal block are M3 screws. Use a crimp terminal fitting a screw diameter. The maximum thickness of the cable should be 0.75 mm^2. (Use 0.5 mm^2 cable when attaching 2 crimp terminals to the same terminal.) The recommended crimp terminal is indicated below. 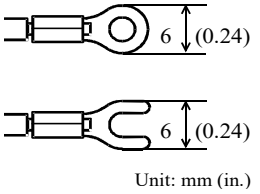 (Recommended) Take great care on handling the terminal because it may fall off if the screw is loose. 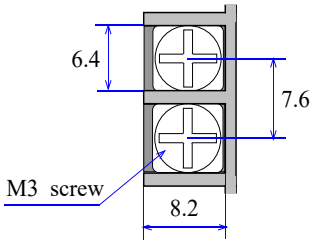
Terminal block cover	This is a cover for installing on the terminal block.

A front view of LED	Indicated contents
	LED of the number that the I/O signal turns on lights up.

(2) The appearance of 32-point I/O module

Name and function of each part		
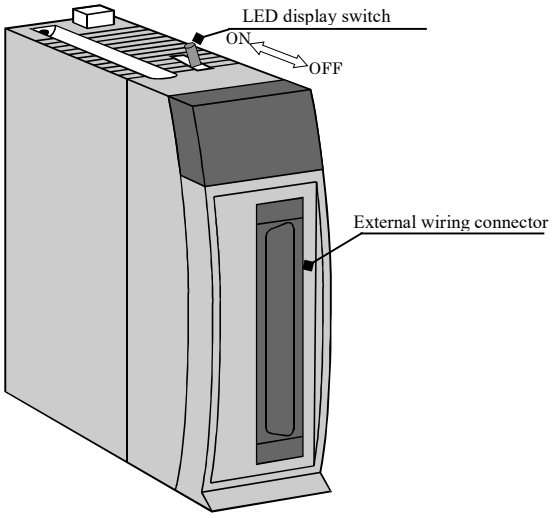	Type (Weight)	EH-XD32, EH-XDL32, EH-XDS32, EH-XDB32, EH-XDBL32, EH-XTT32 (Approx. 0.12 kg (0.26 lb))
		EH-YT32, EH-YTP32 (Approx. 0.11 kg (0.24 lb))
		EH-YTT32 (Approx. 0.12 kg (0.26 lb))
	Dimensions (mm (in.))	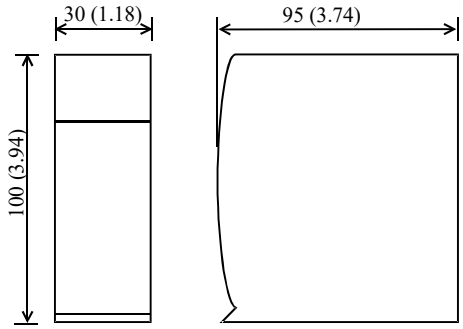
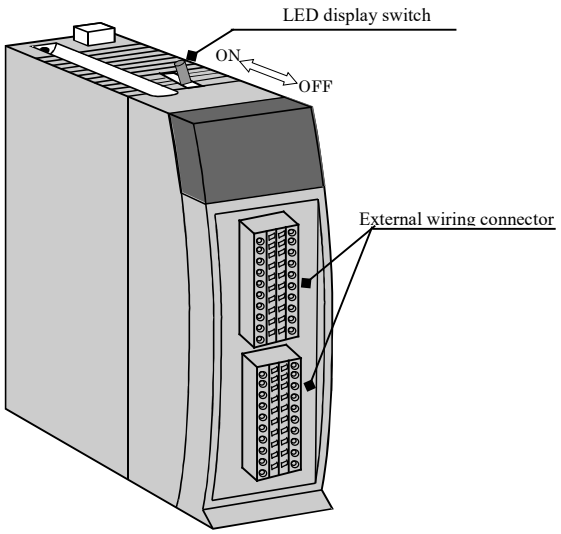	Type (Weight)	EH-XD32E, EH-XDL32E (Approx. 0.15 kg (0.33 lb))
		EH-YT32E, EH-YTP32E (Approx. 0.15 kg (0.33 lb))
	Dimensions (mm (in.))	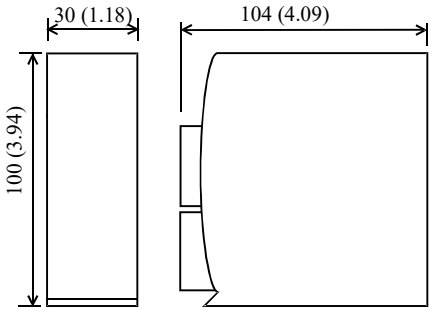
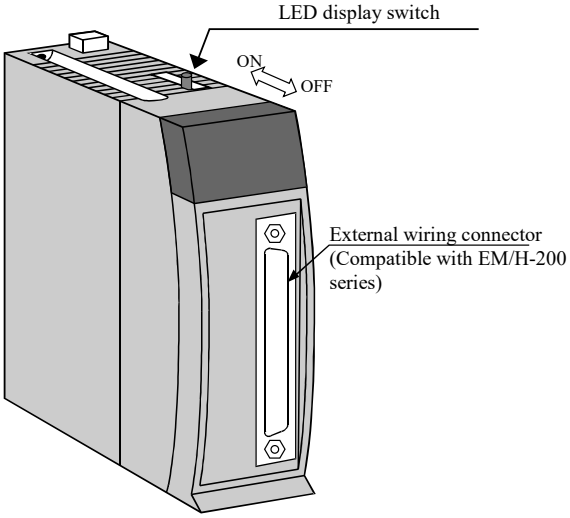	Type (Weight)	EH-XD32H (Approx. 0.12 kg (0.26 lb))
		EH-YT32H (Approx. 0.12 kg (0.26 lb))
	Dimensions (mm (in.))	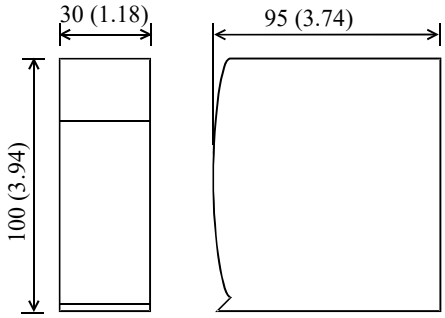

Name	Specification
LED display switch	This switch is used to switch the group to be displayed, in the I/O display.
External wiring connector	This is a connector for connecting the I/O signal.

A front view of LED	Indicated contents
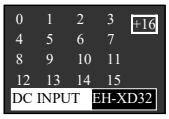	LED of the number that the I/O signal turns on lights up. LED display switch is switched as follows. Switch: OFF — LED +16: No lighting — Display group: 0 to 15 Switch: ON — LED +16: Lighting — Display group: 16 to 31

(3) The appearance of 64-point I/O module

Name and function of each part

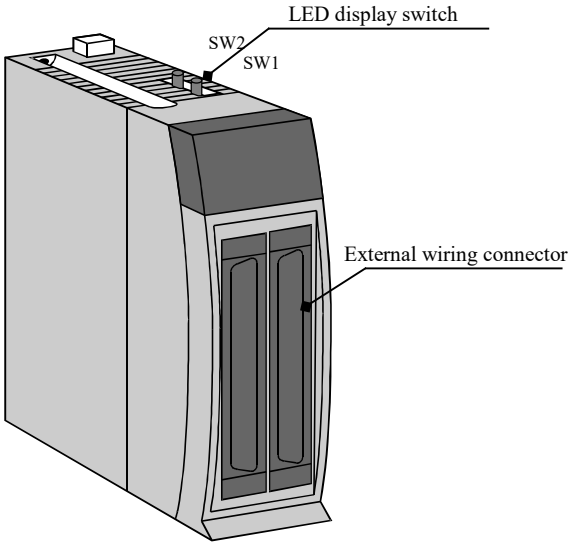

Type (Weight)	EH-XD64, EH-XDL64 (Approx. 0.14 kg (0.31 lb))
	EH-XDB64, EH-XDBL64 (Approx. 0.14 kg (0.31 lb))
	EH-YT64, EH-YTP64 (Approx. 0.13 kg (0.29 lb))
Dimensions (mm (in.))	

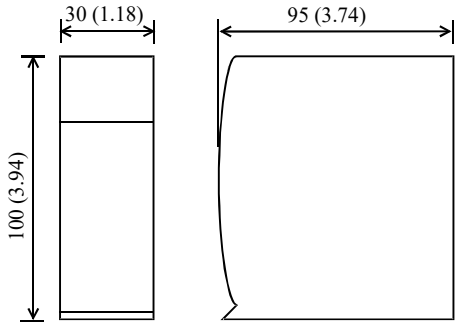

Item	Description
LED display switch	This switch is used to switch the group to be displayed, in the I/O display.
External wiring connector	This is a connector for connecting the I/O signals.

A front view of LED	Indicated contents
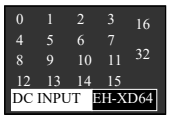	LED of the number that the I/O signal turns on lights up. LED display switch is switched as follows.

SW1	SW2	LED 16	LED 32	Display group
OFF	OFF	Non- lighting	Non-lighting	0 to 15
ON	OFF	Lighting	Non-lighting	16 to 31
OFF	ON	Non-lighting	Lighting	32 to 47
ON	ON	Lighting	Lighting	48 to 63

(4) The appearance of TTL input output module

Name and function of each part	Type (Weight)	EH-MTT32 (Approx. 0.12 kg (0.26 lb))
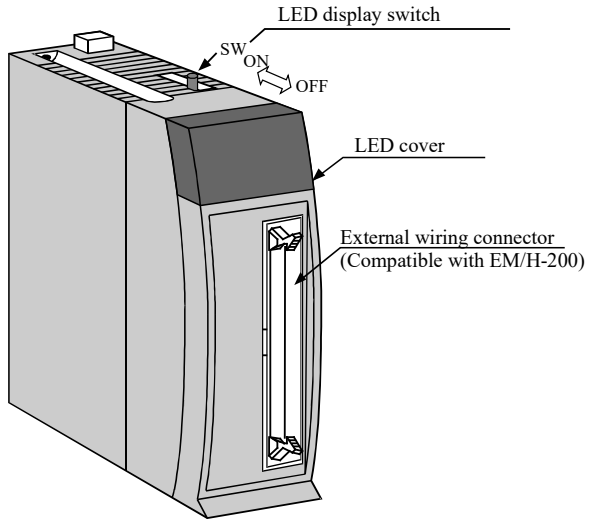	Dimensions (mm (in.))	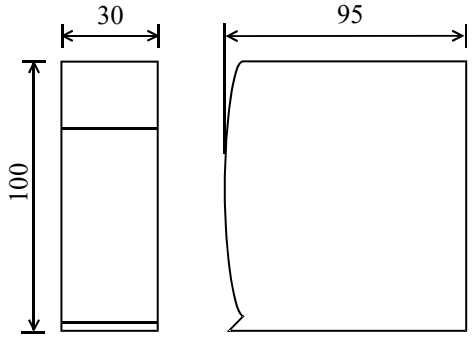
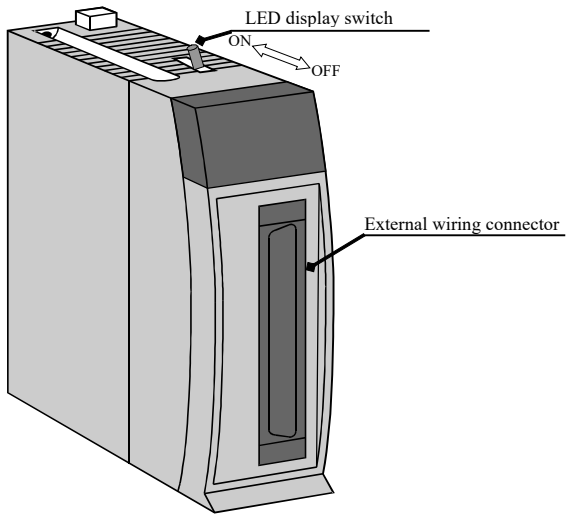	Type (Weight)	EH-MTT32A (Approx. 0.12 kg (0.26 lb))
	Dimensions (mm (in.))	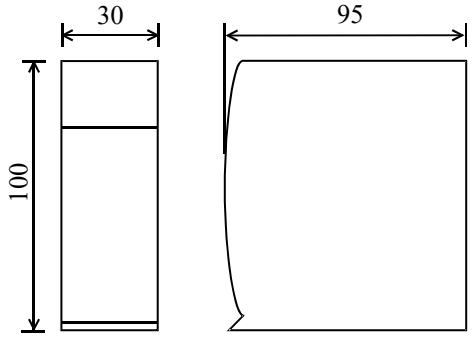

Item	Description
LED display switch	This switch is used to switch the group to be displayed in the I/O display.
External wiring connector	This is a connector for connecting the I/O signal.

A front view of LED	Indicated contents
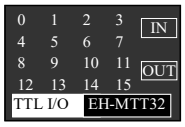	LED of the number that the I/O signal turns on lights up. LED display switch is switched as follows.
	LED of the number that the I/O signal turns on lights up. LED display switch is switched as follows.

Switch position	IN LED	OUT LED	Display group (LED No. 0 to 15)
OFF	Lighting (Green)	OFF	TTL Input (0 to 15)
ON	OFF	Lighting (Green)	TTL Output (16 to 31)

Switch position	OUT LED	Display group (LED No. 0 to 15)
OFF	OFF	TTL Input (0 to 15)
ON	Lighting (Green)	TTL Output (16 to 31)

6.2 Specifications

(1) EH-XD8

Specification		EH-XD8
Input type		DC input (common use to sink and source)
Number of input points		8 points
Input voltage		24 V DC (19.2 to 30 V DC)
Input current		Approx. 6.9 mA
Input impedance		Approx. 3.5 kΩ
Operating voltage	ON voltage	Min. 15 V
	OFF voltage	Max. 5 V
Input response time	ON response	Max. 5 ms
	OFF response	Max. 5 ms
Insulation system		Photo-coupler insulation
Input display		LED display (green)
External connection		Removable type screw terminal block (M3)
Number of input points / commons		8 points / 1 common
Internal current consumption		Approx. 30 mA

Terminal configuration	No.	Signal name	Diagram of Internal circuit
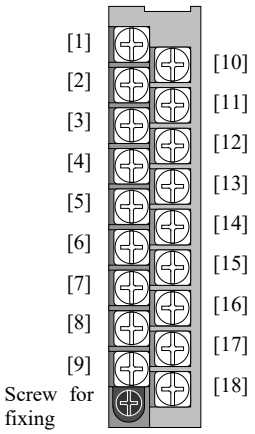	[1]	0	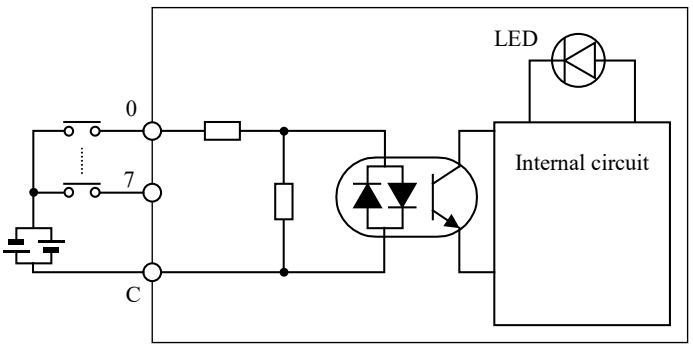
	[2]	1	
	[3]	2	
	[4]	3	
	[5]	4	
	[6]	5	
	[7]	6	
	[8]	7	
	[9]	C	
	[10]	N.C.	
	[11]	N.C.	
	[12]	N.C.	
	[13]	N.C.	
	[14]	N.C.	
	[15]	N.C.	
	[16]	N.C.	
	[17]	N.C.	
	[18]	C	

(2) EH-XD16

Specification		EH-XD16
Input type		DC input (common use to sink and source)
Number of input points		16 points
Input voltage		24 V DC (19.2 to 30 V DC)
Input current		Approx. 4.0 mA
Input impedance		Approx. 5.9 kΩ
Operating voltage	ON voltage	Min. 15 V
	OFF voltage	Max. 5 V
Input response time	ON response	Max. 5 ms
	OFF response	Max. 5 ms
Insulation system		Photo-coupler insulation
Input display		LED display (green)
External connection		Removable type screw terminal block (M3)
Number of input points / commons		16 points / 1 common (common terminal is 2 points.)
Internal current consumption		Approx. 50 mA

Terminal configuration	No.	Signal name	Diagram of Internal circuit
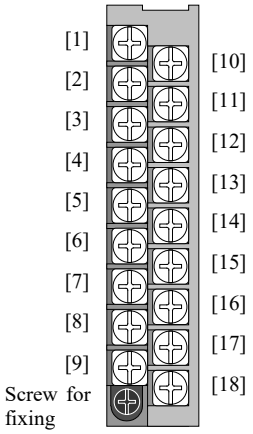	[1]	0	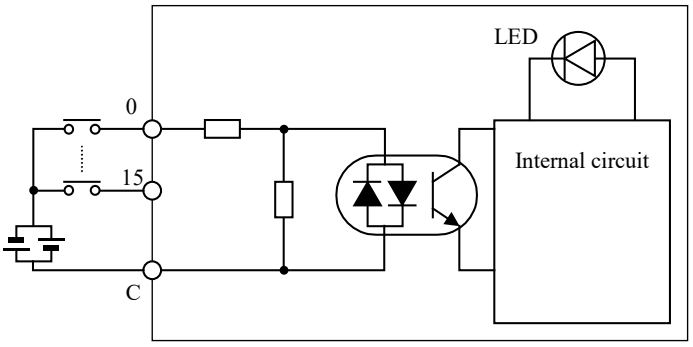
	[2]	1	
	[3]	2	
	[4]	3	
	[5]	4	
	[6]	5	
	[7]	6	
	[8]	7	
	[9]	C	
	[10]	8	
	[11]	9	
	[12]	10	
	[13]	11	
	[14]	12	
	[15]	13	
	[16]	14	
	[17]	15	
	[18]	C	

(3) EH-XDL16

Specification		EH-XDL16
Input type		DC input (common use to sink and source)
Number of input points		16 points
Input voltage		24 V DC (19.2 to 30 V DC)
Input current		Approx. 4.0 mA
Input impedance		Approx. 5.9 kΩ
Operating voltage	ON voltage	Min. 15 V
	OFF voltage	Max. 5 V
Input response time	ON response	Max. 16 ms
	OFF response	Max. 16 ms
Insulation system		Photo-coupler insulation
Input display		LED display (green)
External connection		Removable type screw terminal block (M3)
Number of input points / commons		16 points / 1 common (Common terminal is 2 points.)
Internal current consumption		Approx. 50 mA

Terminal configuration	No.	Signal name	Diagram of internal circuit
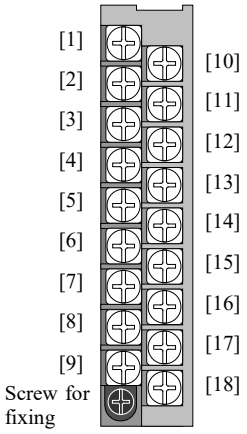	[1]	0	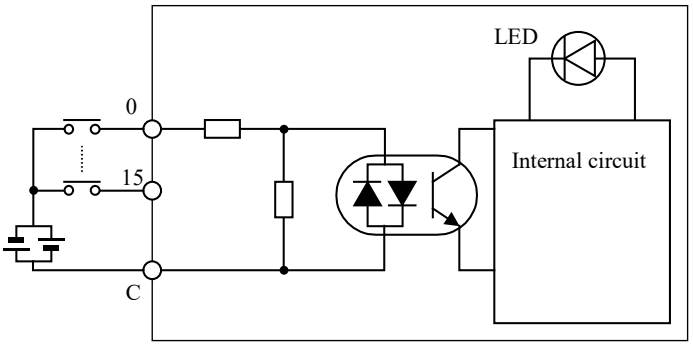
	[2]	1	
	[3]	2	
	[4]	3	
	[5]	4	
	[6]	5	
	[7]	6	
	[8]	7	
	[9]	C	
	[10]	8	
	[11]	9	
	[12]	10	
	[13]	11	
	[14]	12	
	[15]	13	
	[16]	14	
	[17]	15	
	[18]	C	

(4) EH-XDS16

Specification		EH-XDS16
Input type		DC input (common use to sink and source)
Number of input points		16 points
Input voltage		24 V DC (19.2 to 30 V DC)
Input current		Approx. 4.0 mA
Input impedance		Approx. 5.9 kΩ
Operating voltage	ON voltage	Min. 15 V
	OFF voltage	Max. 5 V
Input response time	ON response	Max. 1 ms
	OFF response	Max. 1 ms
Insulation system		Photo-coupler insulation
Input display		LED display (green)
External connection		Removable type screw terminal block (M3)
Number of input points / commons		16 points / 1 common (Common terminal is 2 points.)
Internal current consumption		Approx. 50 mA

Terminal configuration	No.	Signal name	Diagram of internal circuit
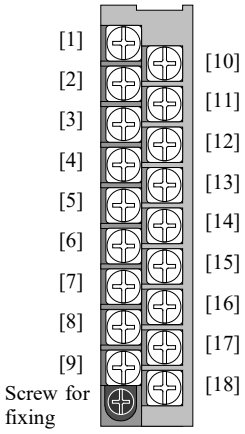	[1]	0	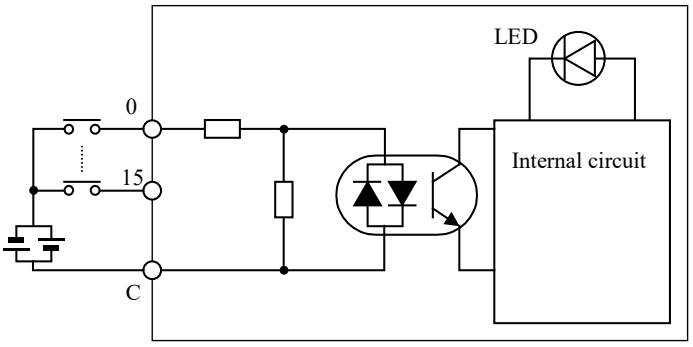
	[2]	1	
	[3]	2	
	[4]	3	
	[5]	4	
	[6]	5	
	[7]	6	
	[8]	7	
	[9]	C	
	[10]	8	
	[11]	9	
	[12]	10	
	[13]	11	
	[14]	12	
	[15]	13	
	[16]	14	
	[17]	15	
	[18]	C	

(5) EH-XDA16

Specification		EH-XDA16
Input type		DC input (common use to sink and source)
Number of input points		16 points
Input voltage		48 V DC (33 to 53 V DC)
Input current		Approx. 4.6 mA
Input impedance		Approx. 10.4 kΩ
Operating voltage	ON voltage	Min. 28 V
	OFF voltage	Max. 9 V
Input response time	ON response	Max. 5 ms (4 ms TYP)
	OFF response	Max. 5 ms (4 ms TYP)
Insulation system		Photo-coupler insulation
Input display		LED display (green)
External connection		Removable type screw terminal block (M3)
Number of input points / commons		16 points / 1 common (common terminal is 2 points.)
Internal current consumption		Approx. 50 mA

Terminal configuration	No.	Signal name	Diagram of Internal circuit
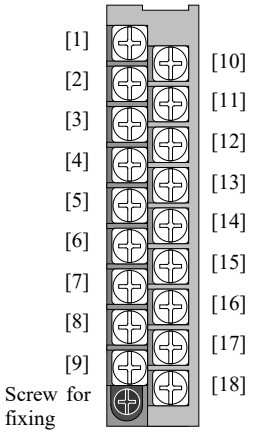	[1]	0	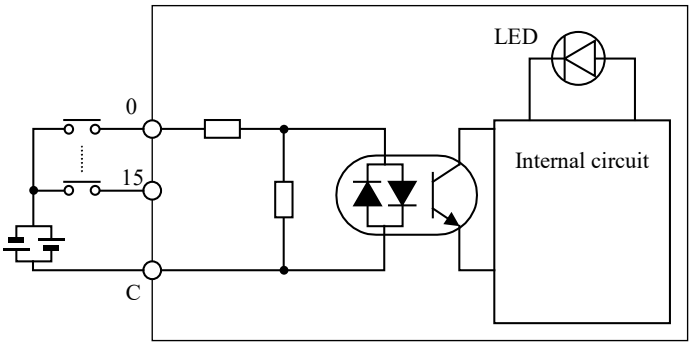
	[2]	1	
	[3]	2	
	[4]	3	
	[5]	4	
	[6]	5	
	[7]	6	
	[8]	7	
	[9]	C	
	[10]	8	
	[11]	9	
	[12]	10	
	[13]	11	
	[14]	12	
	[15]	13	
	[16]	14	
	[17]	15	
	[18]	C	

(6) EH-XA16

Specification		EH-XA16
Input type		AC input
Number of input points		16 points
Input voltage		100 to 120 V AC (85 to 132 V AC)
Input current		4.8 to 7.6 mA (100 V AC / 50Hz)
Input impedance		Approx. 16 kΩ (50 Hz) / Approx. 13 kΩ (60 Hz)
Operating voltage	ON voltage	Min. 79 V AC
	OFF voltage	Max. 20 V AC
Input response time	ON response	Max. 15 ms
	OFF response	Max. 25 ms
Insulation system		Photo-coupler insulation
Input display		LED display (green)
External connection		Removable type screw terminal block (M3)
Number of input points / commons		16 points / 1 common (Common terminal is 2 points.)
Internal current consumption		Approx. 50 mA

Terminal configuration	No.	Signal name	Diagram of Internal circuit
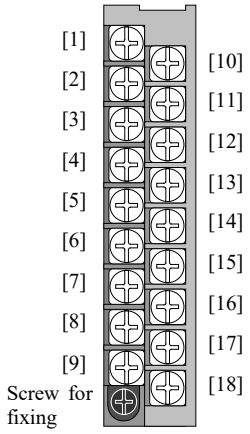	[1]	0	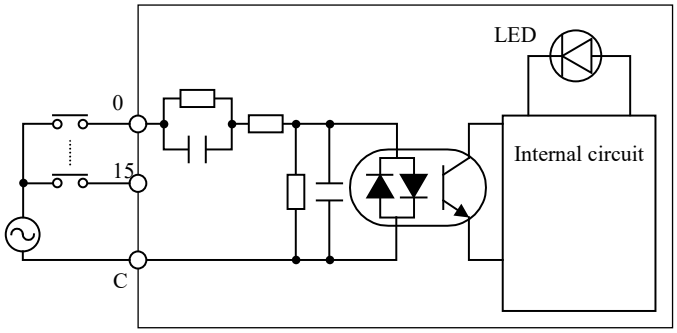
	[2]	1	
	[3]	2	
	[4]	3	
	[5]	4	
	[6]	5	
	[7]	6	
	[8]	7	
	[9]	C	
	[10]	8	
	[11]	9	
	[12]	10	
	[13]	11	
	[14]	12	
	[15]	13	
	[16]	14	
	[17]	15	
	[18]	C	

(7) EH-XAH16

Specification		EH-XAH16
Input type		AC input
Number of input points		16 points
Input voltage		200 to 240 V AC (170 to 264 V AC)
Input current		4.3 to 8.0 mA (200 V AC / 50 Hz)
Input impedance		Approx. 32 kΩ (50 Hz) / Approx. 27 kΩ (60 Hz)
Operating voltage	ON voltage	Min. 164 V AC
	OFF voltage	Max. 40 V AC
Input response time	ON response	Max. 15 ms
	OFF response	Max. 25 ms
Insulation system		Photo-coupler insulation
Input display		LED display (green)
External connection		Removable type screw terminal block (M3)
Number of input points / commons		16 points / 1 common (Common terminal is 2 points.)
Internal current consumption		Approx. 50 mA

Terminal configuration	No.	Signal name	Diagram of Internal circuit
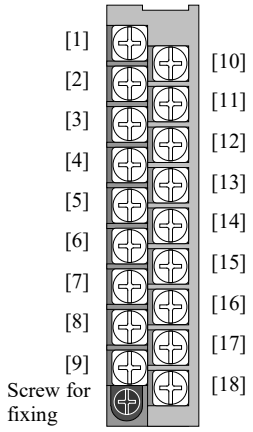	[1]	0	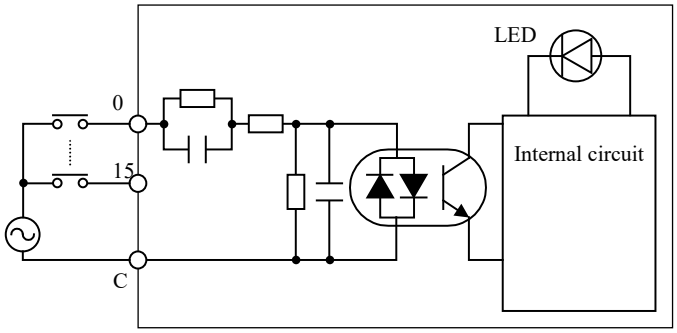
	[2]	1	
	[3]	2	
	[4]	3	
	[5]	4	
	[6]	5	
	[7]	6	
	[8]	7	
	[9]	C	
	[10]	8	
	[11]	9	
	[12]	10	
	[13]	11	
	[14]	12	
	[15]	13	
	[16]	14	
	[17]	15	
	[18]	C	

(8) EH-XD32

Specification		EH-XD32
Input type		DC input (Common use to sink and source)
Number of input points		32 points
Input voltage		24 V DC (19.2 to 30.0 V DC)
Input current		Approx. 4.3 mA
Input impedance		Approx. 5.6 kΩ
Operating voltage	ON voltage	Min. 15 V
	OFF voltage	Max. 5 V
Input response time	ON response	Max. 5 ms
	OFF response	Max. 5 ms
Insulation system		Photo-coupler insulation
Input display		LED connector (green)
External connection		Connector
Number of input points / commons		32 points / 1 common (Common terminal is 4 points.)
Internal current consumption		Approx. 60 mA

Terminal configuration	No.	Signal name	No.	Signal name	Diagram of Internal circuit
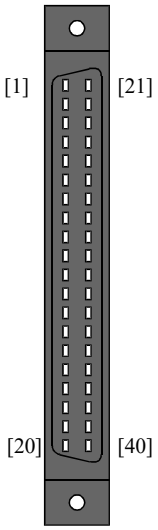	[1]	0	[21]	16	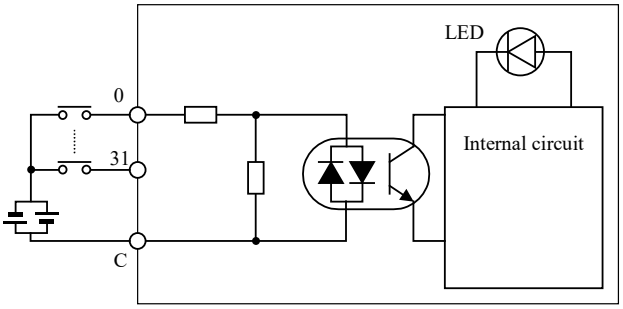
	[2]	1	[22]	17	
	[3]	2	[23]	18	
	[4]	3	[24]	19	
	[5]	4	[25]	20	
	[6]	5	[26]	21	
	[7]	6	[27]	22	
	[8]	7	[28]	23	
	[9]	C	[29]	C	
	[10]	8	[30]	24	
	[11]	9	[31]	25	
	[12]	10	[32]	26	
	[13]	11	[33]	27	
	[14]	12	[34]	28	
	[15]	13	[35]	29	
	[16]	14	[36]	30	
	[17]	15	[37]	31	
	[18]	C	[38]	C	
	[19]	N.C.	[39]	N.C.	
	[20]	N.C.	[40]	N.C.	

Applicable connectors
- A 120mm (4.73in.) space is required for the front of the module. Please choose the installing location (space) accordingly.
- Use a shield cable and always use a class D grounding.

Maker			
	Fujitsu Takamizawa	Solder type	Socket: FCN-361J040-AU, Cover: FCN-360C040-E
		Crimp type	Housing: FCN-363J040, Contact: FCN-363J-AU
		Pressure-displacement type	FCN-367J040-AU/F
	AMP	Solder type	1473381-1

(9) EH-XDL32

Specification		EH-XDL32
Input type		DC input (Common use to sink and source)
Number of input points		32 points
Input voltage		24 V DC (19.2 to 30.0 V DC)
Input current		Approx. 4.3 mA
Input impedance		Approx. 5.6 kΩ
Operating voltage	ON voltage	Min. 15 V
	OFF voltage	Max. 5 V
Input response time	ON response	Max. 16 ms
	OFF response	Max. 16 ms
Insulation system		Photo-coupler insulation
Input display		LED connector (green)
External connection		Connector
Number of input points / commons		32 points / 1 common (Common terminal is 4 points.)
Internal current consumption		Approx. 60 mA

Terminal configuration	No.	Signal name	No.	Signal name	Diagram of Internal circuit
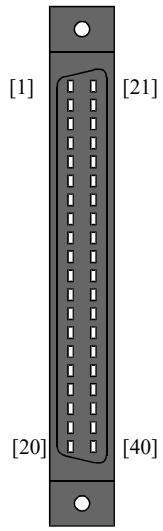	[1]	0	[21]	16	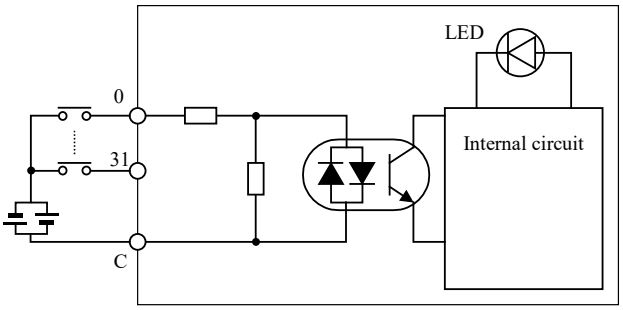
	[2]	1	[22]	17	
	[3]	2	[23]	18	
	[4]	3	[24]	19	
	[5]	4	[25]	20	
	[6]	5	[26]	21	
	[7]	6	[27]	22	
	[8]	7	[28]	23	
	[9]	C	[29]	C	
	[10]	8	[30]	24	
	[11]	9	[31]	25	
	[12]	10	[32]	26	
	[13]	11	[33]	27	
	[14]	12	[34]	28	
	[15]	13	[35]	29	
	[16]	14	[36]	30	
	[17]	15	[37]	31	
	[18]	C	[38]	C	
	[19]	N.C.	[39]	N.C.	
	[20]	N.C.	[40]	N.C.	

Applicable connectors
- A 120 mm (4.73 in.) space is required for the front of the module. Please choose the installing location (space) accordingly.
- Use a shield cable and always use a class D grounding.

Maker			
	Fujitsu Takamizawa	Solder type	Socket: FCN-361J040-AU, Cover: FCN-360C040-E
		Crimp type	Housing: FCN-363J040, Contact: FCN-363J-AU
		Pressure-displacement type	FCN-367J040-AU/F
	AMP	Solder type	1473381-1

(10) EH-XDS32

Specification		EH-XDS32
Input type		DC input (Common use to sink and source)
Number of input points		32 points
Input voltage		24 V DC (19.2 to 30.0 V DC)
Input current		Approx. 4.3 mA
Input impedance		Approx. 5.6 kΩ
Operating voltage	ON voltage	Min. 15 V
	OFF voltage	Max. 5 V
Input response time	ON response	Max. 1 ms
	OFF response	Max. 1 ms
Insulation system		Photo-coupler insulation
Input display		LED connector (green)
External connection		Connector
Number of input points / commons		32 points / 1 common (Common terminal is 4 points.)
Internal current consumption		Approx. 60 mA

Terminal configuration	No.	Signal name	No.	Signal name	Diagram of Internal circuit
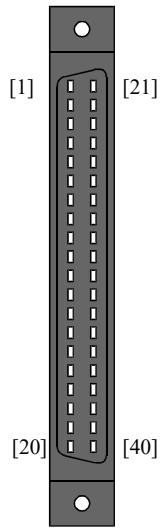	[1]	0	[21]	16	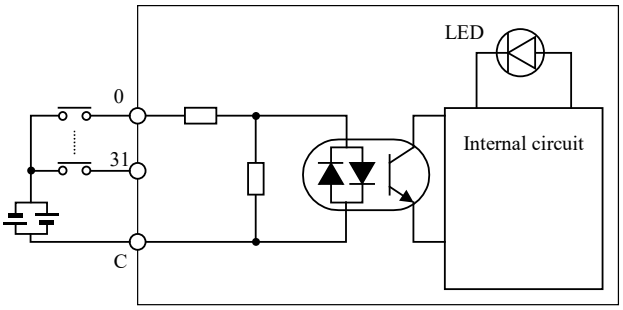
	[2]	1	[22]	17	
	[3]	2	[23]	18	
	[4]	3	[24]	19	
	[5]	4	[25]	20	
	[6]	5	[26]	21	
	[7]	6	[27]	22	
	[8]	7	[28]	23	
	[9]	C	[29]	C	
	[10]	8	[30]	24	
	[11]	9	[31]	25	
	[12]	10	[32]	26	
	[13]	11	[33]	27	
	[14]	12	[34]	28	
	[15]	13	[35]	29	
	[16]	14	[36]	30	
	[17]	15	[37]	31	
	[18]	C	[38]	C	
	[19]	N.C.	[39]	N.C.	
	[20]	N.C.	[40]	N.C.	

Applicable connectors
- A 120mm (4.73in.) space is required for the front of the module. Please choose the installing location (space) accordingly.
- Use a shield cable and always use a class D grounding.

Maker			
	Fujitsu Takamizawa	Solder type	Socket: FCN-361J040-AU, Cover: FCN-360C040-E
		Crimp type	Housing: FCN-363J040, Contact: FCN-363J-AU
		Pressure-displacement type	FCN-367J040-AU/F
	AMP	Solder type	1473381-1

(11) EH-XD32E

Specification		EH-XD32E
Input type		DC input (Common use to sink and source)
Number of input points		32 points
Input voltage		24 V DC (19.2 to 30.0 V DC)
Input current		Approx. 4.3 mA
Input impedance		Approx. 5.6 kΩ
Operating voltage	ON voltage	Min. 15 V
	OFF voltage	Max. 5 V
Input response time	ON response	Max. 1 ms
	OFF response	Max. 1 ms
Insulation system		Photo-coupler insulation
Input display		LED display (green)
External connection		Spring type terminal block (removable type)
Number of input points / commons		8 points / 1 common (Common terminal is 2 points each. 4 system common is independent.)
Internal current consumption		Approx. 60 mA

Terminal configuration

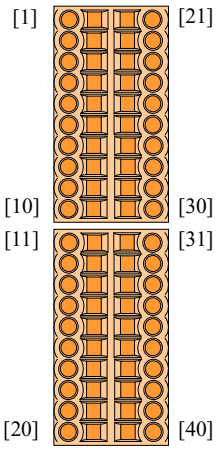

No.	Signal name	No.	Signal name
[1]	0	[21]	16
[2]	1	[22]	17
[3]	2	[23]	18
[4]	3	[24]	19
[5]	4	[25]	20
[6]	5	[26]	21
[7]	6	[27]	22
[8]	7	[28]	23
[9]	C1	[29]	C3
[10]	C1	[30]	C3
[11]	8	[31]	24
[12]	9	[32]	25
[13]	10	[33]	26
[14]	11	[34]	27
[15]	12	[35]	28
[16]	13	[36]	29
[17]	14	[37]	30
[18]	15	[38]	31
[19]	C2	[39]	C4
[20]	C2	[40]	C4

Diagram of Internal circuit

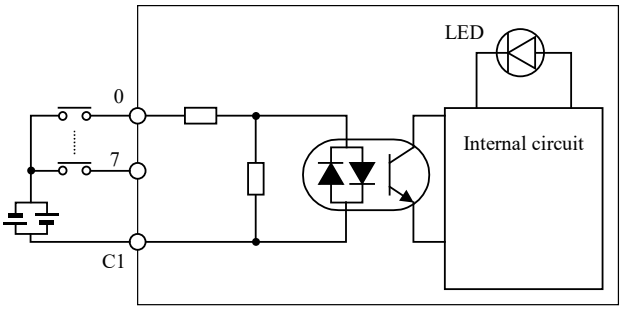

Applicable connectors	Applicable cable
Manufacturer: Weidmuller Type: B2L3.5/20AUOR Product No.: 175736	0.5 mm^2 - 1.0 mm^2 (shared at a twisted pair cable and a single core cable) AWG 28 - 18 A crimp terminal cannot be used.

(12) EH-XDL32E

Specification		EH-XDL32E
Input type		DC input (Common use to sink and source)
Number of input points		32 points
Input voltage		24 V DC (19.2 to 30 V DC)
Input current		Approx. 4.3 mA
Input impedance		Approx. 5.6 kΩ
Operating voltage	ON voltage	Min. 15 V
	OFF voltage	Max. 5 V
Input response time	ON response	Max. 16 ms
	OFF response	Max. 16 ms
Insulation system		Photo-coupler insulation
Input display		LED display (green)
External connection		Spring type terminal block (removable type)
Number of input points / commons		8 points / 1 common (Common terminal is 2 points each. 4 system common is independent.)
Internal current consumption		Approx. 60 mA

Terminal configuration	No.	Signal name	No.	Signal name	Diagram of Internal circuit
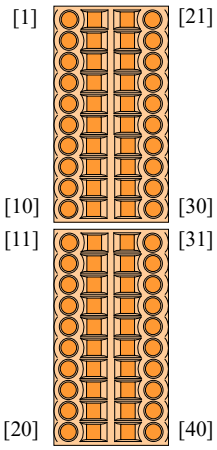	[1]	0	[21]	16	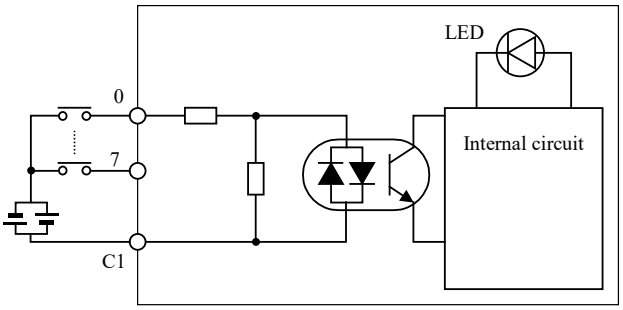
	[2]	1	[22]	17	
	[3]	2	[23]	18	
	[4]	3	[24]	19	
	[5]	4	[25]	20	
	[6]	5	[26]	21	
	[7]	6	[27]	22	
	[8]	7	[28]	23	
	[9]	C1	[29]	C3	
	[10]	C1	[30]	C3	
	[11]	8	[31]	24	
	[12]	9	[32]	25	
	[13]	10	[33]	26	
	[14]	11	[34]	27	
	[15]	12	[35]	28	
	[16]	13	[36]	29	
	[17]	14	[37]	30	
	[18]	15	[38]	31	
	[19]	C2	[39]	C4	
	[20]	C2	[40]	C4	

Applicable connectors	Applicable cable
Manufacturer: Weidmuller Type: B2L3.5/20AUOR Product No.175736	0.5 mm^2 - 1.0 mm^2 (Shared at a twisted pair cable and a single core cable.) AWG 28 - 18 A crimp terminal cannot be used.

(13) EH-XD32H

Item		EH-XD32H	PIM-DM, PIH-DM (for replacing)
Series		HX / EH-150	EM / EM-Ⅱ, H-200 / 250 / 252B / 252C
Input specification		DC input (Common use to source)	
Number of input points		32 points	
Input voltage		24 V DC (21.6 to 26.0 V DC)	
Input current (24V DC)		Approx. 4.1 mA	Approx. 4.7 mA
Input impedance		Approx. 5.9 kΩ	Approx. 5.1 kΩ
Operating voltage	ON voltage	Min. 19 V	
	OFF voltage	Max. 7 V	
Input response time	ON response	Max. 4 ms	
	OFF response	Max. 4 ms	
Insulation system		Photo-coupler insulation	
Number of input points / commons		32 points / 1 common (common terminal is 4 *1)	
Input display		LED (green) *2	LED (red)
polarity		Common terminal (+)	
External connection		Connector (50 pins)	
Internal current consumption		Approx. 60 mA	Approx. 20 mA

*1 Common terminals are connected internally.

*2 There are 16 points for each LED display. The displayed group is toggled using a switch.

Specification of external wiring connector				Wire
Product name	Manufacturer	Product No.	Connection method	
Plug connector	Hirose Electric Co., Ltd.	DX30-50P	Untie crimping	AWG#30
		DX30A-50P		AWG#28
		DX31-50P	Crimping	AWG#30
		DX31A-50P		AWG#28
		DX40-50P	Soldering	-
Die cast cover		DX-50-CV1	-	-

Terminal configuration	No.	Signal name	No.	Signal name	Diagram of Internal circuit
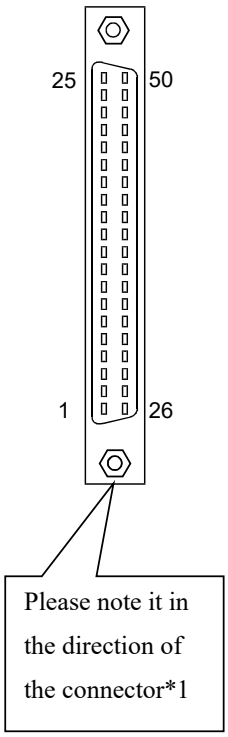	[25]	NC	[50]	NC	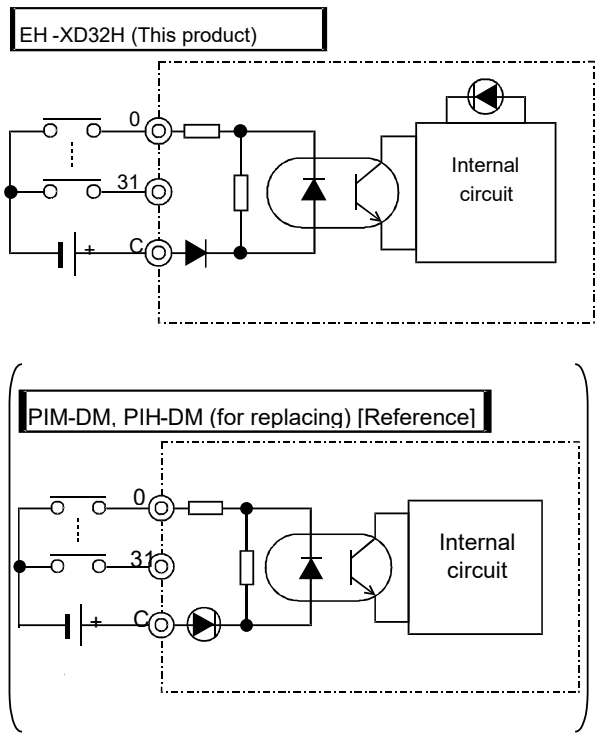
	[24]	NC	[49]	NC	
	[23]	NC	[48]	NC	
	[22]	NC	[47]	NC	
	[21]	15	[46]	31	
	[20]	14	[45]	30	
	[19]	13	[44]	29	
	[18]	12	[43]	28	
	[17]	11	[42]	27	
	[16]	10	[41]	26	
	[15]	9	[40]	25	
	[14]	8	[39]	24	
	[13]	NC	[38]	NC	
	[12]	C	[37]	C	
	[11]	NC	[36]	NC	
	[10]	7	[35]	23	
	[9]	6	[34]	22	
	[8]	5	[33]	21	
	[7]	4	[32]	20	
	[6]	3	[31]	19	
	[5]	2	[30]	18	
	[4]	1	[29]	17	
	[3]	0	[28]	16	
	[2]	NC	[27]	NC	
	[1]	C	[26]	C	

*1 EH-XD32H has a turned connector to a 32-point I/O module for EM / H-200 series. Connect an external wiring cable rotating 180 degrees around when replacing the module. (You cannot connect the cable in wrong direction due to the structure for avoiding improper connection.)

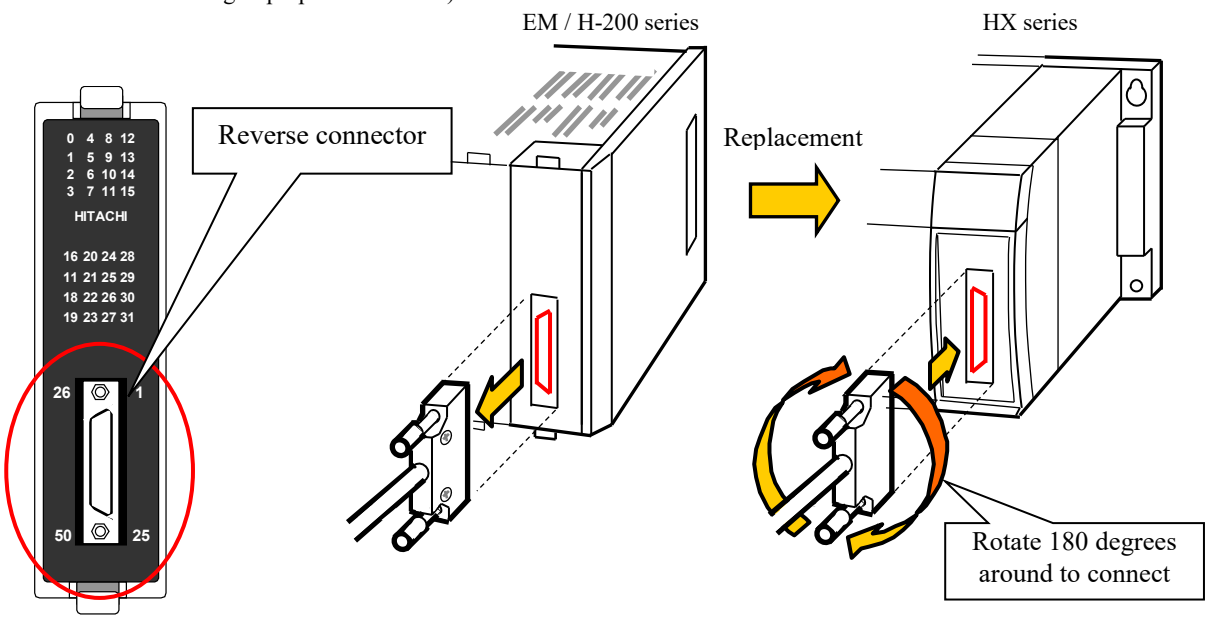

(14) EH-XDB32

Specification		EH-XDB32
Input type		DC input (Common use to sink and source)
Number of input points		32 points
Input voltage		12 V DC (9.6 to 14.4 V DC)
Input current		Approx. 9 mA
Input impedance		Approx. 1.2 kΩ
Operating voltage	ON voltage	Min. 6.4 V
	OFF voltage	Max. 2 V
Input response time	ON response	Max. 5 ms
	OFF response	Max. 5 ms
Insulation system		Photo-coupler insulation
Input display		LED connector (green)
External connection		Connector
Number of input points / commons		32 points / 1 common (Common terminal is 4 points.)
Internal current consumption		Approx. 60 mA

Terminal configuration	No.	Signal name	No.	Signal name	Diagram of Internal circuit
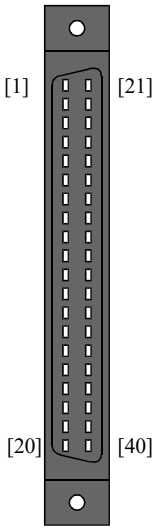	[1]	0	[21]	16	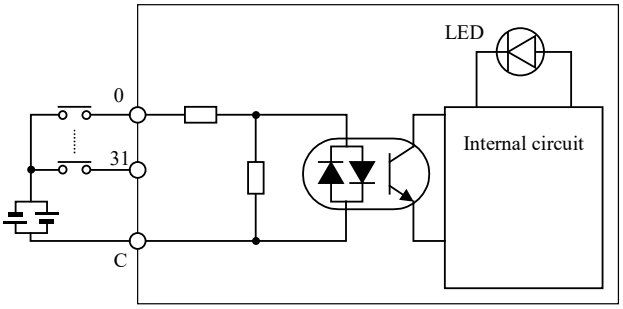
	[2]	1	[22]	17	
	[3]	2	[23]	18	
	[4]	3	[24]	19	
	[5]	4	[25]	20	
	[6]	5	[26]	21	
	[7]	6	[27]	22	
	[8]	7	[28]	23	
	[9]	C	[29]	C	
	[10]	8	[30]	24	
	[11]	9	[31]	25	
	[12]	10	[32]	26	
	[13]	11	[33]	27	
	[14]	12	[34]	28	
	[15]	13	[35]	29	
	[16]	14	[36]	30	
	[17]	15	[37]	31	
	[18]	C	[38]	C	
	[19]	N.C.	[39]	N.C.	
	[20]	N.C.	[40]	N.C.	

Applicable connectors
- A 120mm (4.73in.) space is required for the front of the module. Please choose the installing location (space) accordingly.
- Use a shield cable and always use a class D grounding.

Maker			
	Fujitsu Takamizawa	Solder type	Socket: FCN-361J040-AU, Cover: FCN-360C040-E
		Crimp type	Housing: FCN-363J040, Contact: FCN-363J-AU
		Pressure-displacement type	FCN-367J040-AU/F
	AMP	Solder type	1473381-1

(15) EH-XDBL32

Specification		EH-XDBL32
Input type		DC input (Common use to sink and source)
Number of input points		32 points
Input voltage		12 V DC (9.6 to 14.4 V DC)
Input current		Approx. 9 mA
Input impedance		Approx. 1.2 kΩ
Operating voltage	ON voltage	Min. 6.4 V
	OFF voltage	Max. 2 V
Input response time	ON response	Max. 16 ms
	OFF response	Max. 16 ms
Insulation system		Photo-coupler insulation
Input display		LED connector (green)
External connection		Connector
Number of input points / commons		32 points / 1 common (Common terminal is 4 points.)
Internal current consumption		Approx. 60 mA

Terminal configuration	No.	Signal name	No.	Signal name
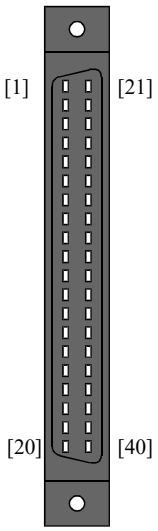	[1]	0	[21]	16
	[2]	1	[22]	17
	[3]	2	[23]	18
	[4]	3	[24]	19
	[5]	4	[25]	20
	[6]	5	[26]	21
	[7]	6	[27]	22
	[8]	7	[28]	23
	[9]	C	[29]	C
	[10]	8	[30]	24
	[11]	9	[31]	25
	[12]	10	[32]	26
	[13]	11	[33]	27
	[14]	12	[34]	28
	[15]	13	[35]	29
	[16]	14	[36]	30
	[17]	15	[37]	31
	[18]	C	[38]	C
	[19]	N.C.	[39]	N.C.
	[20]	N.C.	[40]	N.C.

Diagram of Internal circuit

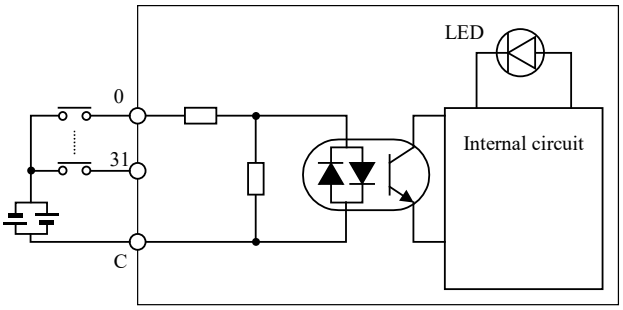

Applicable connectors
- A 120 mm (4.73 in.) space is required for the front of the module. Please choose the installing location (space) accordingly.
- Use a shield cable and always use a class D grounding.

Maker			
	Fujitsu Takamizawa	Solder type	Socket: FCN-361J040-AU, Cover: FCN-360C040-E
		Crimp type	Housing: FCN-363J040, Contact: FCN-363J-AU
		Pressure-displacement type	FCN-367J040-AU/F
	AMP	Solder type	1473381-1

(16) EH-XTT32

Specification		EH-XTT32	Reference: XTT05BH
Input type		DC input (TTL level input, sink type)	
Number of input points		32 points	
Input voltage		3 to 15 V DC	
Input current		Approx. 5 mA (5 V) *1	Approx. 6 mA (5 V)
Input impedance		Approx. 1 kΩ (5 V)	Approx. 820 Ω
Operating voltage	ON voltage	5 V external power supply: Max. 1.5 V 15 V external power supply: Max. 4.5 V	
	OFF voltage	5 V external power supply: Min. 3.5 V 15 V external power supply: Min. 11 V	
Input response time	ON response	Max. 1 ms	
	OFF response	Max. 1 ms	
Insulation system		Photo-coupler insulation	
Input display		Led display (green)	Led display (red)
External connection		Connector	Removable type screw terminal block (M3)
Number of input points / commons		16 (2 commons, 4 terminals)	
Fuse		0.63 A *2	-
External power supply capacity (terminal S)		0.12 A (5 V) 0.2 A (15 V)	0.35 A (5 V) 0.9 A (15 V)
Internal current consumption		Max. 80 mA	Max. 150 mA

*1 Please note that the input current slightly decays.
*2 If the fuse would blow, the module needs to be repaired. The fuse cannot be replaced.

Terminal configuration *3	No.	Signal name	No.	Signal name
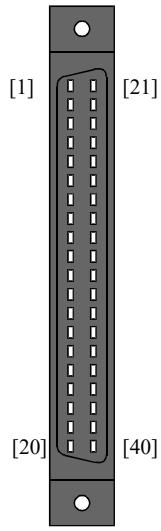	[1]	0	[21]	16
	[2]	1	[22]	17
	[3]	2	[23]	18
	[4]	3	[24]	19
	[5]	4	[25]	20
	[6]	5	[26]	21
	[7]	6	[27]	22
	[8]	7	[28]	23
	[9]	COM0	[29]	COM1
	[10]	S0	[30]	S1
	[11]	8	[31]	24
	[12]	9	[32]	25
	[13]	10	[33]	26
	[14]	11	[34]	27
	[15]	12	[35]	28
	[16]	13	[36]	29
	[17]	14	[37]	30
	[18]	15	[38]	31
	[19]	COM0	[39]	COM1
	[20]	S0	[40]	S1

Diagram of Internal circuit

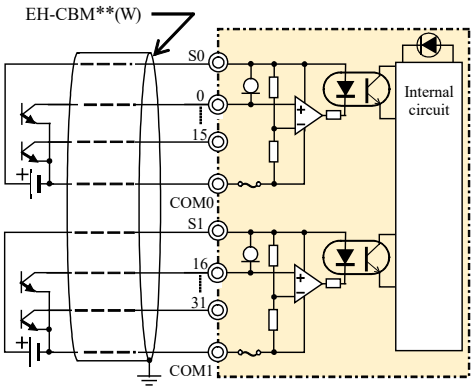

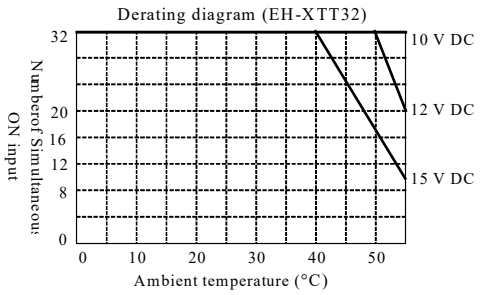

Compatible connector
Please make sure to secure 120 mm space on the front of the module.
Please use a shield cable and always use a class D grounding.

Vender			
	Fujitsu	Solder Pin type	Socket: FCN-361J040-AU, Cover: FCN-360C040-E
		Crimp type	Housing: FCN-363J040, Contact: FCN-363J-AU, Cover: FCN-360C040-E
		IDC type	Jack: FCN-367J040-AU/F
	AMP	Solder Pin type	Connector: 1473381-1

*3 Please note that the signal arrangement is different from other 32-point input modules like EH-XD32 because there are S terminals.

(17) EH-XD64

Specification		EH-XD64
Input type		DC input (Common used to sink and source)
Number of input points		64 points
Input voltage		24 V DC (19.2 to 30.0 V DC)
Input current		Approx. 4.3 mA
Input impedance		Approx. 5.6 kΩ
Operating voltage	ON voltage	Min. 15 V
	OFF voltage	Max. 5 V
Input response time	ON response	Max. 1 ms
	OFF response	Max. 1 ms
Insulation system		Photo-coupler insulation
Input display		LED display (green)*1
External connection		Connector
Number of input points / commons		32 points / 1 common (Common terminal is 4 points each. 2 system common is independent.*2)
Internal current consumption		Approx. 80 mA

*1 There are 16 points of LED indication. The indication group is switched by toggle switch.
*2 2 groups(C1,C2) are separated. 4 common terminals in one group are connected internally.

Terminal configuration	No.	Signal name	No.	Signal name	No.	Signal name	No.	Signal name	Diagram of Internal circuit
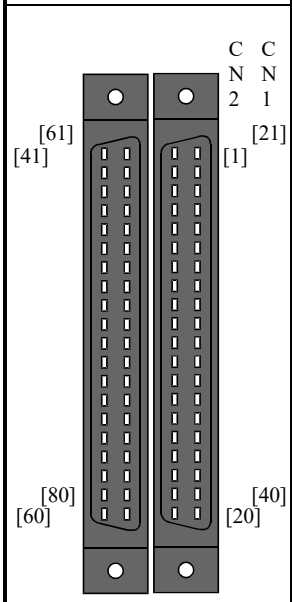	[41]	32	[61]	48	[1]	0	[21]	16	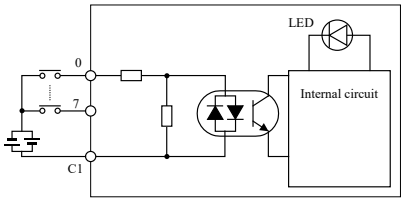
	[42]	33	[62]	49	[2]	1	[22]	17	
	[43]	34	[63]	50	[3]	2	[23]	18	
	[44]	35	[64]	51	[4]	3	[24]	19	
	[45]	36	[65]	52	[5]	4	[25]	20	
	[46]	37	[66]	53	[6]	5	[26]	21	
	[47]	38	[67]	54	[7]	6	[27]	22	
	[48]	39	[68]	55	[8]	7	[28]	23	
	[49]	C2	[69]	C2	[9]	C1	[29]	C1	
	[50]	40	[70]	56	[10]	8	[30]	24	
	[51]	41	[71]	57	[11]	9	[31]	25	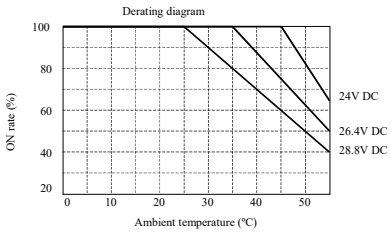
	[52]	42	[72]	58	[12]	10	[32]	26	
	[53]	43	[73]	59	[13]	11	[33]	27	
	[54]	44	[74]	60	[14]	12	[34]	28	
	[55]	45	[75]	61	[15]	13	[35]	29	
	[56]	46	[76]	62	[16]	14	[36]	30	
	[57]	47	[77]	63	[17]	15	[37]	31	
	[58]	C2	[78]	C2	[18]	C1	[38]	C1	
	[59]	N.C.	[79]	N.C.	[19]	N.C.	[39]	N.C.	
	[60]	N.C.	[80]	N.C.	[20]	N.C.	[40]	N.C.	

Applicable connectors
- A 120 mm (4.73 in.) space is required for the front of the module. Please choose the installing location (space) accordingly.
- Use a shield cable and always use a class D grounding.

Manufacturer			
	Fujitsu Takamizawa	Solder type	Socket: FCN-361J040-AU, Cover: FCN-360C040-E
		Crimp type	Housing: FCN-363J040, Contact: FCN-363J-AU
		Pressure-displacement type	FCN-367J040-AU/F
	AMP	Solder type	1473381-1

(18) EH-XDL64

Specification		EH-XDL64
Input type		DC input (Common used to sink and source)
Number of input points		64 points
Input voltage		24 V DC (19.2 to 30.0 V DC)
Input current		Approx. 4.3 mA
Input impedance		Approx. 5.6 kΩ
Operating voltage	ON voltage	Min. 15 V
	OFF voltage	Max. 5 V
Input response time	ON response	Max. 16 ms
	OFF response	Max. 16 ms
Insulation system		Photo-coupler insulation
Input display		LED display (green)*1
External connection		Connector
Number of input points / commons		32 points / 1 common (Common terminal is 4 points each. 2 system common is independent.*2)
Internal current consumption		Approx. 80 mA

*1 There are 16 points of LED indication. The indication group is switched by toggle switch.
*2 2 groups(C1,C2) are separated. 4 common terminals in one group are connected internally.

Terminal configuration	No.	Signal name	No.	Signal name	No.	Signal name	No.	Signal name	Diagram of Internal circuit
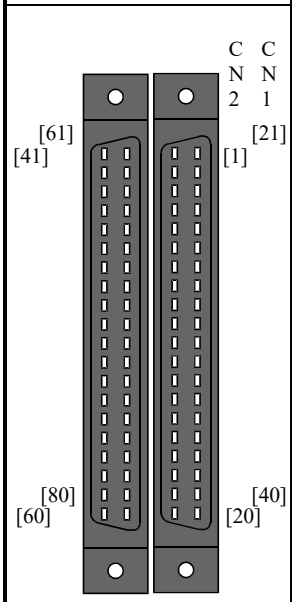	[41]	32	[61]	48	[1]	0	[21]	16	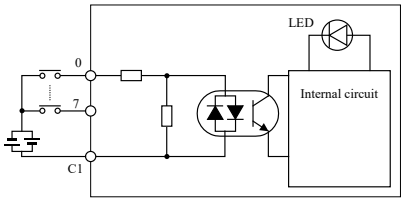
	[42]	33	[62]	49	[2]	1	[22]	17	
	[43]	34	[63]	50	[3]	2	[23]	18	
	[44]	35	[64]	51	[4]	3	[24]	19	
	[45]	36	[65]	52	[5]	4	[25]	20	
	[46]	37	[66]	53	[6]	5	[26]	21	
	[47]	38	[67]	54	[7]	6	[27]	22	
	[48]	39	[68]	55	[8]	7	[28]	23	
	[49]	C2	[69]	C2	[9]	C1	[29]	C1	
	[50]	40	[70]	56	[10]	8	[30]	24	
	[51]	41	[71]	57	[11]	9	[31]	25	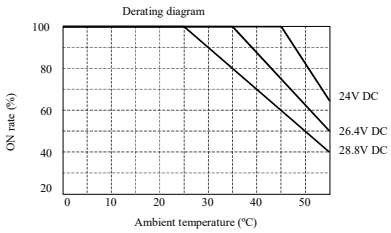
	[52]	42	[72]	58	[12]	10	[32]	26	
	[53]	43	[73]	59	[13]	11	[33]	27	
	[54]	44	[74]	60	[14]	12	[34]	28	
	[55]	45	[75]	61	[15]	13	[35]	29	
	[56]	46	[76]	62	[16]	14	[36]	30	
	[57]	47	[77]	63	[17]	15	[37]	31	
	[58]	C2	[78]	C2	[18]	C1	[38]	C1	
	[59]	N.C.	[79]	N.C.	[19]	N.C.	[39]	N.C.	
	[60]	N.C.	[80]	N.C.	[20]	N.C.	[40]	N.C.	

Applicable connectors
- A 120 mm (4.73 in.) space is required for the front of the module. Please choose the installing location (space) accordingly.
- Use a shield cable and always use a class D grounding.

Manufacturer			
	Fujitsu Takamizawa	Solder type	Socket: FCN-361J040-AU, Cover: FCN-360C040-E
		Crimp type	Housing: FCN-363J040, Contact: FCN-363J-AU
		Pressure-displacement type	FCN-367J040-AU/F
	AMP	Solder type	1473381-1

(19) EH-XDB64

Specification		EH-XDB64
Input type		DC input (Common used to sink and source)
Number of input points		64 points
Input voltage		12 V DC (9.6 to 14.4 V DC)
Input current		Approx. 9 mA
Input impedance		Approx. 1.2 kΩ
Operating voltage	ON voltage	Min. 6.4 V
	OFF voltage	Max. 2 V
Input response time	ON response	Max. 1 ms
	OFF response	Max. 1 ms
Insulation system		Photo-coupler insulation
Input display		LED display (green)*1
External connection		Connector
Number of input points / commons		32 points / 1 common (Common terminal is 4 points each. 2 system common is independent.*2)
Internal current consumption		Approx. 80 mA

*1 There are 16 points of LED indication. The indication group is switched by toggle switch.
*2 2 groups(C1,C2) are separated. 4 common terminals in one group are connected internally.

Terminal configuration	No.	Signal name	No.	Signal name	No.	Signal name	No.	Signal name	Diagram of Internal circuit
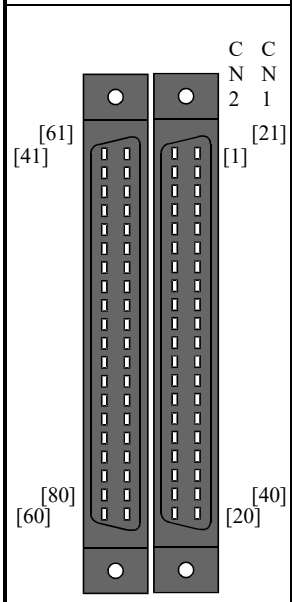	[41]	32	[61]	48	[1]	0	[21]	16	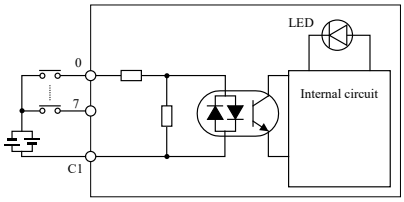
	[42]	33	[62]	49	[2]	1	[22]	17	
	[43]	34	[63]	50	[3]	2	[23]	18	
	[44]	35	[64]	51	[4]	3	[24]	19	
	[45]	36	[65]	52	[5]	4	[25]	20	
	[46]	37	[66]	53	[6]	5	[26]	21	
	[47]	38	[67]	54	[7]	6	[27]	22	
	[48]	39	[68]	55	[8]	7	[28]	23	
	[49]	C2	[69]	C2	[9]	C1	[29]	C1	
	[50]	40	[70]	56	[10]	8	[30]	24	
	[51]	41	[71]	57	[11]	9	[31]	25	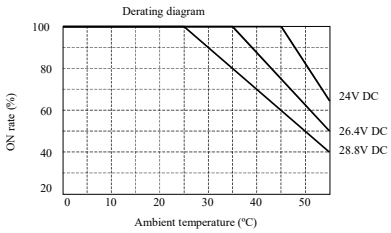
	[52]	42	[72]	58	[12]	10	[32]	26	
	[53]	43	[73]	59	[13]	11	[33]	27	
	[54]	44	[74]	60	[14]	12	[34]	28	
	[55]	45	[75]	61	[15]	13	[35]	29	
	[56]	46	[76]	62	[16]	14	[36]	30	
	[57]	47	[77]	63	[17]	15	[37]	31	
	[58]	C2	[78]	C2	[18]	C1	[38]	C1	
	[59]	N.C.	[79]	N.C.	[19]	N.C.	[39]	N.C.	
	[60]	N.C.	[80]	N.C.	[20]	N.C.	[40]	N.C.	

Applicable connectors
- A 120 mm (4.73 in.) space is required for the front of the module. Please choose the installing location (space) accordingly.
- Use a shield cable and always use a class D grounding.

Manufacturer	Fujitsu Takamizawa	Solder type	Socket: FCN-361J040-AU, Cover: FCN-360C040-E
		Crimp type	Housing: FCN-363J040, Contact: FCN-363J-AU
		Pressure-displacement type	FCN-367J040-AU/F
	AMP	Solder type	1473381-1

(20) EH-XDBL64

Specification		EH-XDBL64
Input type		DC input (Common used to sink and source)
Number of input points		64 points
Input voltage		12 V DC (9.6 to 14.4 V DC)
Input current		Approx. 9 mA
Input impedance		Approx. 1.2 kΩ
Operating voltage	ON voltage	Min. 6.4 V
	OFF voltage	Max. 2 V
Input response time	ON response	Max. 16 ms
	OFF response	Max. 16 ms
Insulation system		Photo-coupler insulation
Input display		LED display (green)*1
External connection		Connector
Number of input points / commons		32 points / 1 common (Common terminal is 4 points each. 2 system common is independent.*2)
Internal current consumption		Approx. 80 mA

*1 There are 16 points of LED indication. The indication group is switched by toggle switch.
*2 2 groups(C1,C2) are separated. 4 common terminals in one group are connected internally.

Terminal configuration	No.	Signal name	No.	Signal name	No.	Signal name	No.	Signal name	Diagram of Internal circuit
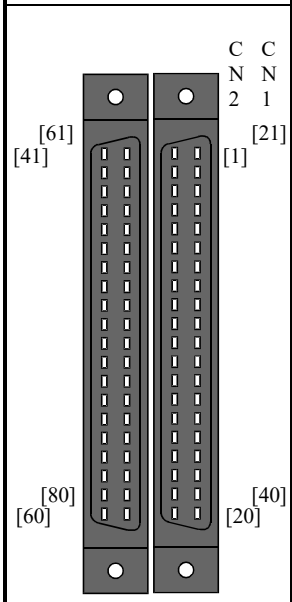	[41]	32	[61]	48	[1]	0	[21]	16	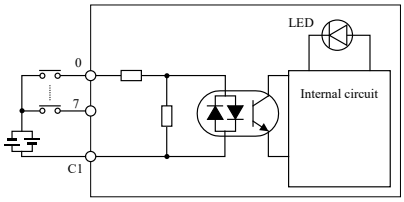
	[42]	33	[62]	49	[2]	1	[22]	17	
	[43]	34	[63]	50	[3]	2	[23]	18	
	[44]	35	[64]	51	[4]	3	[24]	19	
	[45]	36	[65]	52	[5]	4	[25]	20	
	[46]	37	[66]	53	[6]	5	[26]	21	
	[47]	38	[67]	54	[7]	6	[27]	22	
	[48]	39	[68]	55	[8]	7	[28]	23	
	[49]	C2	[69]	C2	[9]	C1	[29]	C1	
	[50]	40	[70]	56	[10]	8	[30]	24	
	[51]	41	[71]	57	[11]	9	[31]	25	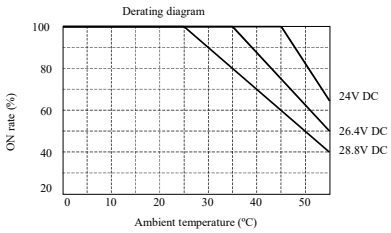
	[52]	42	[72]	58	[12]	10	[32]	26	
	[53]	43	[73]	59	[13]	11	[33]	27	
	[54]	44	[74]	60	[14]	12	[34]	28	
	[55]	45	[75]	61	[15]	13	[35]	29	
	[56]	46	[76]	62	[16]	14	[36]	30	
	[57]	47	[77]	63	[17]	15	[37]	31	
	[58]	C2	[78]	C2	[18]	C1	[38]	C1	
	[59]	N.C.	[79]	N.C.	[19]	N.C.	[39]	N.C.	
	[60]	N.C.	[80]	N.C.	[20]	N.C.	[40]	N.C.	

Applicable connectors
- A 120 mm (4.73 in.) space is required for the front of the module. Please choose the installing location (space) accordingly.
- Use a shield cable and always use a class D grounding.

Manufacturer	Fujitsu Takamizawa	Solder type	Socket: FCN-361J040-AU, Cover: FCN-360C040-E
		Crimp type	Housing: FCN-363J040, Contact: FCN-363J-AU
		Pressure-displacement type	FCN-367J040-AU/F
	AMP	Solder type	1473381-1

(21) EH-YT8

Specification		EH-YT8
Output specification		Transistor output (sink type)
Number of output points		8 points
Rated load voltage		12 / 24 V DC (+10 %, -15 %)
Minimum switching current		1 mA
Leak current		0.1 mA
Maximum load current	1 circuit	0.5 A(0.3 A MFG NO.02F** or before)*1
	1 common	2.4 A
Output response time	OFF➔ON	Max. 0.3 ms
	ON➔OFF	Max. 1 ms
Insulation system		Photo-coupler insulation
Output display		LED display (green)
External connection		Removable type screw terminal block (M3)
Number of output points / commons		8 points / 1 common
Surge removal circuit		Diode
Fuse*2		4 A / 1 common
External power supply (for supplying power to S-terminal)		12 / 24 V DC (+10 %, -15 %) (30 mA at the maximum)
Internal current consumption		Approx. 30 mA
Short-circuit protection function		None

*1 MFG NO. (02F**) indicates products of June 2002.
*2 The module needs to be repaired in case the short-circuited load causes the fuse to blown out.
But, users cannot replace the fuse.

Terminal configuration	No.	Signal name	Diagram of Internal circuit
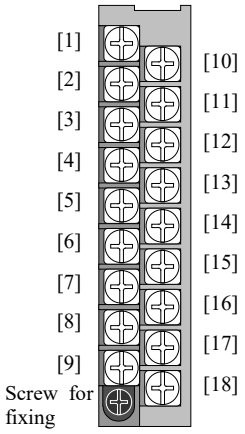	[1]	0	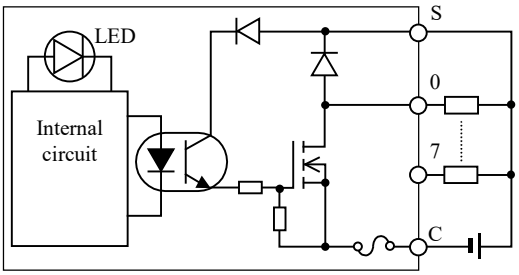
	[2]	1	
	[3]	2	
	[4]	3	
	[5]	4	
	[6]	5	
	[7]	6	
	[8]	7	
	[9]	C	
	[10]	N.C.	
	[11]	N.C.	
	[12]	N.C.	
	[13]	N.C.	
	[14]	N.C.	
	[15]	N.C.	
	[16]	N.C.	
	[17]	N.C.	
	[18]	S	

(22) EH-YT16

Specification		EH-YT16
Output specification		Transistor output (sink type)
Number of output prints		16 points
Rated load voltage		12 / 24 V DC (+10 %, -15 %)
Minimum switching current		1 mA
Leak current		0.1 mA
Maximum load current	1 circuit	0.5 A(0.3 A MFG NO.02F** or before)*1
	1 common	4 A
Output response time	OFF➔ON	Max. 0.3 ms
	ON➔OFF	Max. 1 ms
Insulation system		Photo-coupler insulation
Output display		LED display (green)
External connection		Removable type screw terminal block (M3)
Number of output points / commons		16 points / 1 common
Surge removal circuit		Diode
Fuse*2		8 A / 1 common
External power supply (for supplying power to S-terminal)		12 / 24 V DC (+10 %, -15 %) (30 mA at the maximum)
Internal current consumption		Approx. 50 mA
Short-circuit protection function		None

*1 MFG NO. (02F**) indicates products of June 2002.
*2 The module needs to be repaired in case the short-circuited load causes the fuse to blown out.
But, users cannot replace the fuse.

Terminal configuration	No.	Signal name	Diagram of Internal circuit
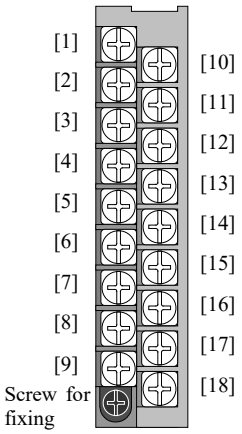	[1]	0	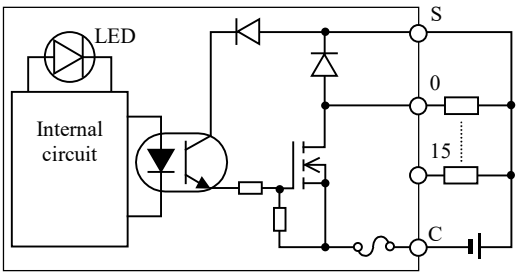
	[2]	1	
	[3]	2	
	[4]	3	
	[5]	4	
	[6]	5	
	[7]	6	
	[8]	7	
	[9]	C	
	[10]	8	
	[11]	9	
	[12]	10	
	[13]	11	
	[14]	12	
	[15]	13	
	[16]	14	
	[17]	15	
	[18]	S	

(23) EH-YTA16

Specification		EH-YTA16
Output specification		Transistor output (sink type)
Number of output prints		16 points
Rated load voltage		24 / 48 V DC (21 to 53 V DC)
Minimum switching current		1 mA
Leak current		0.1 mA
Maximum load current	1 circuit	2 A
	1 common	Max. 5 A
Output response time	OFF➔ON	Max. 0.3 ms
	ON➔OFF	Max. 1 ms
Insulation system		Photo-coupler insulation
Output display		LED display (green)
External connection		Removable type screw terminal block (M3)
Number of output points / commons		16 points / 1 common
Surge removal circuit		Diode
Fuse *1		8 A / 1 common
External power supply *2 (for supplying power to S-terminal)		48 V DC (21 to 53 V DC) (30 mA at the maximum) *3
Internal current consumption		Approx. 50 mA
Short-circuit protection function		None

*1 The module needs to be repaired in case the short-circuited load causes the fuse to blown out.
But, users cannot replace the fuse.
*2 It's necessary to supply rated load voltage from outside to the S-terminal.
*3 This value is internal current consumption of the module. Additional current is necessary to drive other devices.

Terminal configuration	No.	Signal name	Diagram of Internal circuit
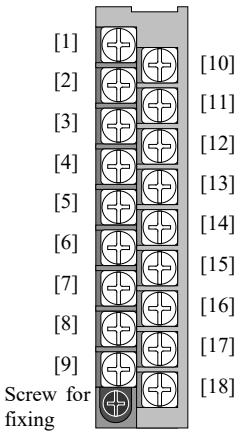	[1]	0	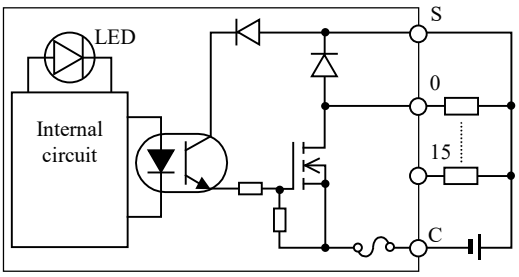
	[2]	1	
	[3]	2	
	[4]	3	
	[5]	4	
	[6]	5	
	[7]	6	
	[8]	7	
	[9]	C	
	[10]	8	
	[11]	9	
	[12]	10	
	[13]	11	
	[14]	12	
	[15]	13	
	[16]	14	
	[17]	15	
	[18]	S	

(24) EH-YTP8

Specification		EH-YTP8
Output specification		Transistor output (source type)
Number of output points		8 points
Rated load voltage		12 / 24 V DC (+10 %, -15 %)
Minimum switching current		1 mA
Leak current		0.1 mA
Maximum load current	1 circuit	0.5 A(0.3 A MFG NO.02F** or before)*1
	1 common	2.4 A
Output response time	OFF➔ON	Max. 0.3 ms
	ON➔OFF	Max. 1 ms
Insulation system		Photo-coupler insulation
Output display		LED display (green)
External connection		Removal type screw terminal block (M3)
Number of output points / commons		8 points / 1 common
Surge removal circuit		Diode
Fuse*2		4 A / 1 common
External power supply (for supplying power to S-terminal)		12 / 24 V DC (+10 %, -15 %) (30 mA at the maximum)
Internal current consumption		Approx. 30 mA
Short-circuit protection function		None

*1 MFG NO. (02F**) indicates products of June 2002.
*2 The module needs to be repaired in case the short-circuited load causes the fuse to blown-out.
But, users cannot replace the fuse.

Terminal configuration	No.	Signal name	Diagram of Internal circuit
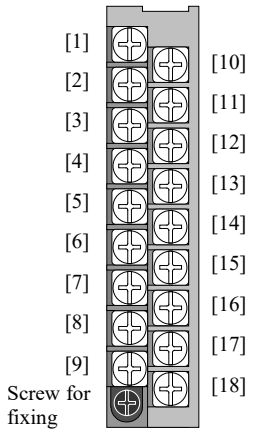	[1]	0	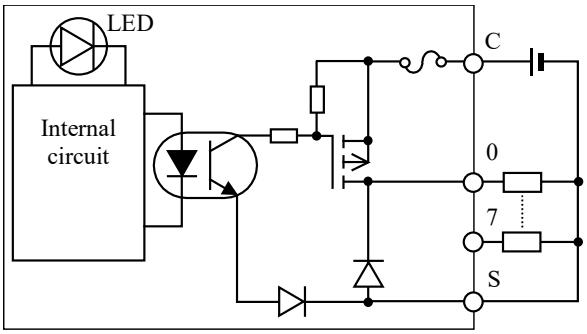
	[2]	1	
	[3]	2	
	[4]	3	
	[5]	4	
	[6]	5	
	[7]	6	
	[8]	7	
	[9]	C	
	[10]	N.C.	
	[11]	N.C.	
	[12]	N.C.	
	[13]	N.C.	
	[14]	N.C.	
	[15]	N.C.	
	[16]	N.C.	
	[17]	N.C.	
	[18]	S	

(25) EH-YTP16

Specification		EH-YTP16
Output specification		Transistor output (source type)
Number of output points		16 points
Rated load voltage		12 / 24 V DC (+10 %, -15 %)
Minimum switching current		1 mA
Leak current		0.1 mA
Maximum load current	1 circuit	0.5 A (0.3 A MFG NO.02F** or before*1)
	1 common	4 A
Output response time	OFF➔ON	Max. 0.3 ms
	ON➔OFF	Max. 1 ms
Insulation system		Photo-coupler insulation
Output display		LED display (green)
External connection		Removable type screw terminal block (M3)
Number of output points / commons		16 points / 1 common
Surge removal circuit		Diode
Fuse*2		8 A / 1 common
External power supply (for supplying power to S-terminal)		12 / 24 V DC (+10 %, -15 %) (30 mA at the maximum)
Internal current consumption		Approx. 50 mA
Short-circuit protection function		None

*1 MFG NO. (02F**) indicates products of June 2002.
*2 The module needs to be repaired in case the short-circuited load causes the fuse to blown out.
But, users cannot replace the fuse.

Terminal configuration	No.	Signal name	Diagram of Internal circuit
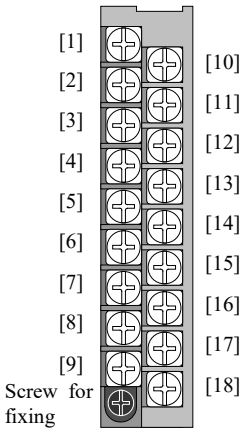	[1]	0	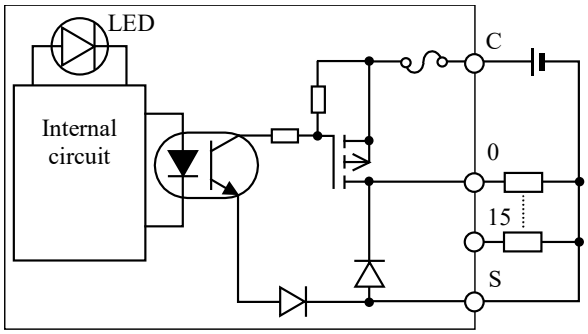
	[2]	1	
	[3]	2	
	[4]	3	
	[5]	4	
	[6]	5	
	[7]	6	
	[8]	7	
	[9]	C	
	[10]	8	
	[11]	9	
	[12]	10	
	[13]	11	
	[14]	12	
	[15]	13	
	[16]	14	
	[17]	15	
	[18]	S	

(26) EH-YTPA16

Specification		EH-YTPA16
Output specification		Transistor output (source type)
Number of output points		16 points
Rated load voltage		24 / 48 V DC (21 to 53 V DC)
Minimum switching current		1 mA
Leak current		0.1 mA
Maximum load current	1 circuit	1 A (No. 0 to 9) 2A (No. 10 to 15)
	1 common	5 A
Output response time	OFF➔ON	Max. 0.3 ms
	ON➔OFF	Max. 1 ms
Insulation system		Photo-coupler insulation
Output display		LED display (green)
External connection		Removable type screw terminal block (M3)
Number of output points / commons		16 points / 1 common
Surge removal circuit		Diode
Fuse*2		8 A / 1 common
External power supply *2 (for supplying power to S-terminal)		48 V DC (21 to 53 V DC) (30 mA at the maximum) *3
Internal current consumption		Approx. 50 mA
Short-circuit protection function		None

*1 The module needs to be repaired in case the short-circuited load causes the fuse to blown out.
But, users cannot replace the fuse.
*2 It's necessary to supply rated load voltage from outside to the S-terminal.
*3 This value is internal current consumption of the module. Additional current is necessary to drive other devices.

Terminal configuration	No.	Signal name	Diagram of Internal circuit
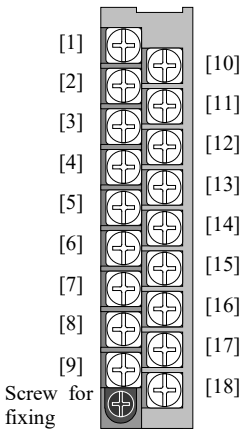	[1]	0	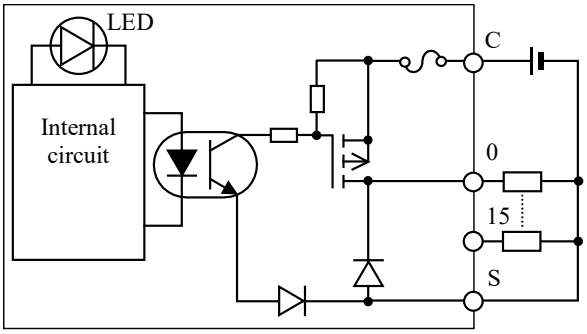
	[2]	1	
	[3]	2	
	[4]	3	
	[5]	4	
	[6]	5	
	[7]	6	
	[8]	7	
	[9]	C	
	[10]	8	
	[11]	9	
	[12]	10	
	[13]	11	
	[14]	12	
	[15]	13	
	[16]	14	
	[17]	15	
	[18]	S	

(27) EH-YTP16S

Specification		EH-YTP16S
Output specification		Transistor output (source type)
Number of output points		16 points
Raged load voltage		12 / 24 V DC (+10 %, -15 %)
Minimum switching current		1 mA
Leak current		0.1 mA
Maximum load current	1 circuit	0.8 A
	1 common	5 A
Output response time	OFF➔ON	Max. 0.3 ms
	ON➔OFF	Max. 1 ms
Insulation system		Photo-coupler insulation
Output display		LED display (green)
External connection		Removable type screw terminal block (M3)
Number of output points / commons		16 points / 1 common
Surge removal circuit		Built-in
Fuse		None
External power supply (for supplying power to S-terminal)		12 / 24 V DC (+10 %, -15 %) (30 mA at the maximum)
Internal current consumption		Approx. 50 mA
Short-circuit protection function		Available

Terminal configuration	No.	Signal name	Diagram of Internal circuit
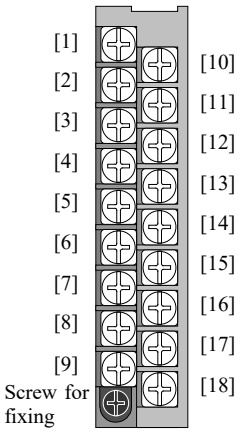	[1]	0	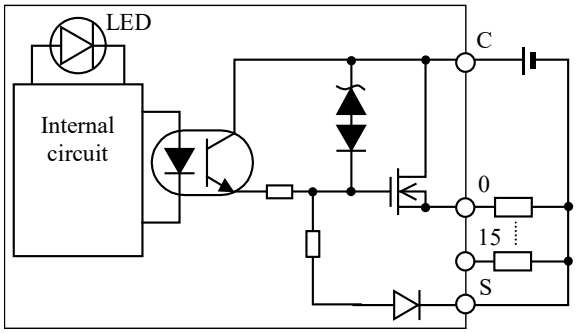
	[2]	1	
	[3]	2	
	[4]	3	
	[5]	4	
	[6]	5	
	[7]	6	
	[8]	7	
	[9]	C	
	[10]	8	
	[11]	9	
	[12]	10	
	[13]	11	
	[14]	12	
	[15]	13	
	[16]	14	
	[17]	15	
	[18]	S	

(28) EH-YR8B

Specification		EH-YR8B
Output specification		Relay output
Number of output points		8 points
Rated load voltage		100 / 240 V AC , 24 V DC
Minimum switching current		1 mA(5 V DC), except after a great current switching
Leak current		None
Maximum load current	1 circuit	2 A
	1 common	2 A
Output response time	OFF➔ON	Max. 10 ms
	ON➔OFF	Max. 10 ms
Insulation system		Relay insulation
Output display		LED display (green)
External connection		Removable type screw terminal block (M3)
Number of output points / commons		1 point / 1 common (Each channel is independent.)
Surge removal circuit		Varistor (Varistor voltage 423 to 517 V)
Fuse		None
External power supply		Not used
Internal current consumption (5 V DC)		Approx. 220 mA

Terminal configuration	No.	Signal name	Diagram of Internal circuit
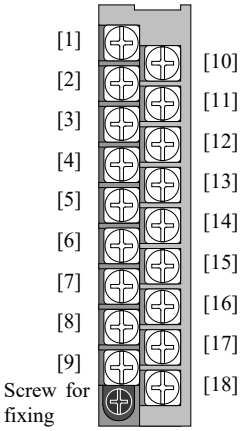	[1]	0	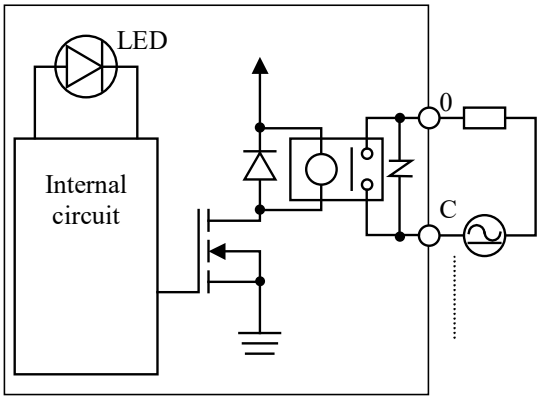
	[2]	1	
	[3]	2	
	[4]	3	
	[5]	4	
	[6]	5	
	[7]	6	
	[8]	7	
	[9]	N.C.	
	[10]	C0	
	[11]	C1	
	[12]	C2	
	[13]	C3	
	[14]	C4	
	[15]	C5	
	[16]	C6	
	[17]	C7	
	[18]	N.C.	

(29) EH-YR12

Specification		EH-YR12
Output specification		Relay output
Number of output points		12 points
Rated load voltage		100 / 240 V AC, 24 V DC
Minimum switching current		1 mA (5 V DC), except a great current switching
Leak current		None
Maximum load current	1 circuit	2 A
	1 common	5 A
Output response time	OFF➔ON	Max. 10 ms
	ON➔OFF	Max. 10 ms
Insulation system		Photo-coupler insulation
Output display		LED display (green)
External connection		Removable type screw terminal block (M3)
Number of output points / commons		12 points / 1 common (Common terminal is 2 points.)
Surge removal circuit		None
Fuse		None
External power supply		24 V DC (+10 %, -15 %) (70 mA at the maximum)
Internal current consumption (5 V DC)		Approx. 40 mA

Terminal configuration	No.	Signal name	Diagram of Internal circuit
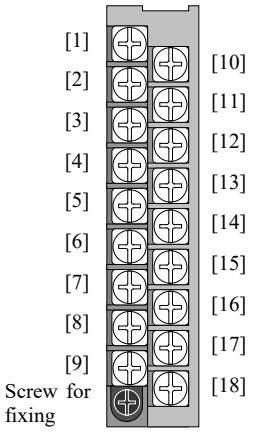	[1]	24V DC+	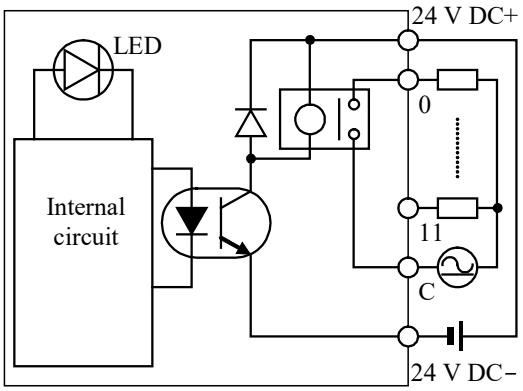
	[2]	N.C.	
	[3]	0	
	[4]	1	
	[5]	2	
	[6]	3	
	[7]	4	
	[8]	5	
	[9]	C	
	[10]	24V DC-	
	[11]	N.C.	
	[12]	6	
	[13]	7	
	[14]	8	
	[15]	9	
	[16]	10	
	[17]	11	
	[18]	C	

(30) EH-YR16 / EH-YR16D

Item		Specification	
Type		EH-YR16	EH-YR16D
Output specification		Relay output	
Rated load voltage		100 / 240 V AC, 24 V DC	
Minimum switching current		1 mA	
Leak current		None	
Maximum load current	1 circuit	2 A	
	1 common	8 A (Ambient temperature 40 ºC) See the below derating table	4 A (Ambient temperature 40 ºC) See the below derating table
Output response time	OFF → ON	Max. 10 ms	
	ON → OFF	Max. 10 ms	
Number of output points		16 points / module	
Number of common points		16 points / 1 common (Common terminal is 2)*1	8 points / 1 common (Common terminal is 2)*2
Surge removal circuit		There is no Surge removal circuit and Fuse internal of this module. Please Install proper device in the each output and / or the common line.	
Fuse			
Insulation system		Relay insulation	
Output display		LED (green)	
External connection		Removable type screw terminal block (M3)	
Internal current consumption (5 V DC)		Approximately 430 mA	

*1 The common terminals are connected internally.

*2 The common terminals are separated.

Terminal configuration	No.	Signal name	
		YR16	YR16D
	[1]	0	0
	[2]	1	1
	[3]	2	2
	[4]	3	3
	[5]	4	4
	[6]	5	5
	[7]	6	6
	[8]	7	7
	[9]	C	C0
	[10]	8	8
	[11]	9	9
	[12]	10	10
	[13]	11	11
	[14]	12	12
	[15]	13	13
	[16]	14	14
	[17]	15	15
	[18]	C	C1

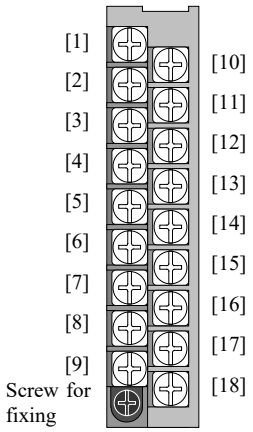

Diagram of Internal circuit

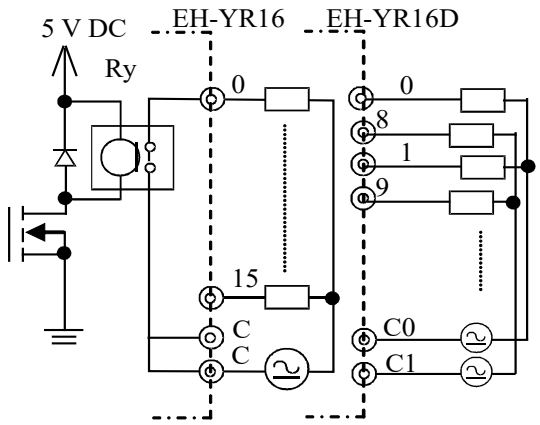

Derating table

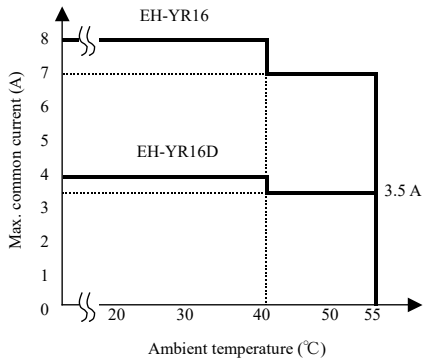

(31) EH-YS16

Specification		EH-YS16
Output specification		Triac output
Number of output points		16 points
Rated load voltage		100 / 240 V AC (85 to 250 V AC)
Minimum switching current		10 mA
Leak current		Max. 2 mA
Maximum load current	1 circuit	0.3 A
	1 common	4 A (Ambient temperature 45 °C), see the following derating table
Output response time	OFF➔ON	Max. 1 ms
	ON➔OFF	Max. 1 ms + 1/2 cycle
Insulation system		Photo-coupler triac insulation
Output display		LED display (green)
External connection		Removable type screw terminal block (M3)
Number of output points / commons		16 pints / 1 common
Surge removal circuit		Varistor
Fuse		6.3 A (Mounting a fuse to external is necessary.)
Internal current consumption		Approx. 250 mA

Terminal configuration	No.	Signal name	Diagram of Internal output
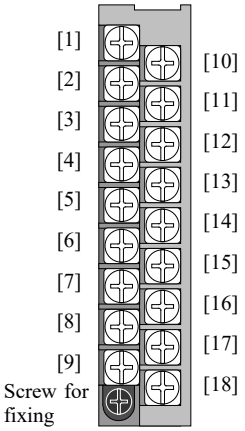	[1]	0	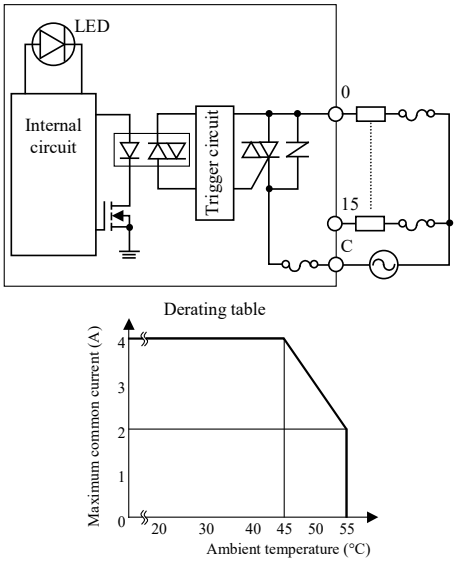
	[2]	1	
	[3]	2	
	[4]	3	
	[5]	4	
	[6]	5	
	[7]	6	
	[8]	7	
	[9]	C	
	[10]	8	
	[11]	9	
	[12]	10	
	[13]	11	
	[14]	12	
	[15]	13	
	[16]	14	
	[17]	15	
	[18]	C	

(32) EH-YT32

Specification		EH-YT32
Output specification		Transistor output (sink type)
Number of output points		32 points
Rated load voltage		12 / 24 V DC (+10 %, -15 %)
Minimum switching current		1 mA
Leak current		0.1 mA
Maximum load current	1 circuit	0.2 A
	1 common	6.4 A*1
Output response time	OFF➔ON	Max. 0.3 ms
	ON➔OFF	Max. 1 ms
Insulation system		Photo-coupler insulation
Output display		LED display (green)*2
External connection		Connector
Number of output points / commons		32 points / 1 common (Common terminal is 4 points.)
Surge removal circuit		Diode
Fuse*3		10 A / 1 common
External power supply (for supplying power to S-terminal)		12 / 24 V DC (+10 %, -15 %) (30 mA at the maximum)
Internal current consumption (5 V DC)		Approx. 90 mA
Short-circuit protection function		Available*4

*1 Total current of 4 common pins.
For each common pin of a connector, please make common current which is sent into one common pin into maximum 3 A.
*2 There are 16 points for each LED display. The display group is switched using a switch.
*3 The module needs to be repaired in case a fuse is blown out. But, users cannot replace the fuse.
*4 MFG No.01E** or later are applied.(MFG No.01E** indicates products of May 2001.)

Terminal configuration

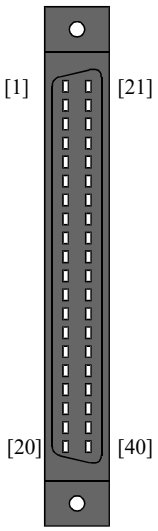

No.	Signal name	No.	Signal name
[1]	0	[21]	16
[2]	1	[22]	17
[3]	2	[23]	18
[4]	3	[24]	19
[5]	4	[25]	20
[6]	5	[26]	21
[7]	6	[27]	22
[8]	7	[28]	23
[9]	C	[29]	C
[10]	S	[30]	S
[11]	8	[31]	24
[12]	9	[32]	25
[13]	10	[33]	26
[14]	11	[34]	27
[15]	12	[35]	28
[16]	13	[36]	39
[17]	14	[37]	30
[18]	15	[38]	31
[19]	C	[39]	C
[20]	S	[40]	S

Diagram of Internal circuit

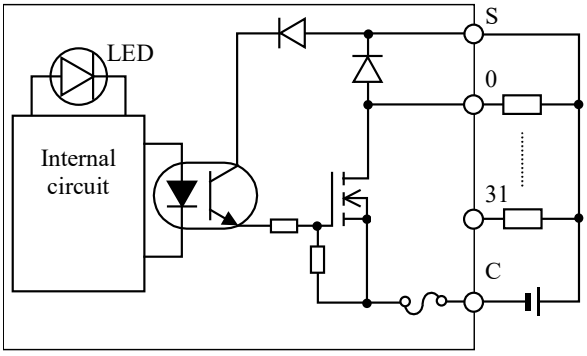

Applicable connector
- A 120mm (4.73 in.) space is required for the front of the module. Please choose the installing location (space) accordingly.
- Use a shield cable and always use a class D grounding.

Manufacturer	Fujitsu Takamizawa	Solder type	Socket: FCN-361J040-AU, Cover: FCN-360C040-E
		Crimp type	Housing: FCN-363J040, Contact: FCN-363J-AU
		Pressure-displacement type	FCN-367J040-AU/F
	AMP	Solder type	1473381-1

(33) EH-YTP32

Specification		EH-YTP32
Output specification		Transistor output (source type)
Number of output points		32 points
Rated load voltage		12 / 24 V DC (+10 %, -15 %)
Minimum switching current		1 mA
Leak current		0.1 mA
Maximum load current	1 circuit	0.2 A
	1 common	6.4 A*1
Output response time	OFF➔ON	Max. 0.3 ms
	ON➔OFF	Max. 1 ms
Insulation system		Photo-coupler insulation
Output display		LED display (green)*2
External connection		Connector
Number of output points / commons		32 points / 1 common (Common terminal is 4 points.)
Surge removal circuit		Diode
Fuse*3		10 A / 1 common
External power supply (for supplying power to S-terminal)		12 / 24 V DC (+10 %, -15 %) (30 mA at the maximum)
Internal current consumption (5 V DC)		Approx. 90 mA
Short-circuit protection function		Available*4

*1 Total current of 4 common pins.
For each common pin of a connector, please make common current which is sent into one common pin into maximum 3 A.
*2 There are 16 points for each LED display. The display group is switched using a switch.
*3 The module needs to be repaired in case a fuse is blown out. But, users cannot replace.
*4 MFG No.01E** or later are applied.(MFG No.01E** indicates products of May 2001.)

Terminal configuration	No.	Signal name	No.	Signal name
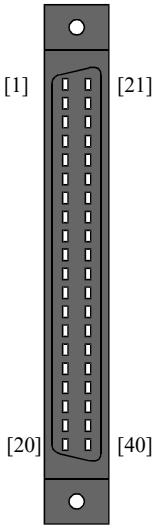	[1]	0	[21]	16
	[2]	1	[22]	17
	[3]	2	[23]	18
	[4]	3	[24]	19
	[5]	4	[25]	20
	[6]	5	[26]	21
	[7]	6	[27]	22
	[8]	7	[28]	23
	[9]	C	[29]	C
	[10]	S	[30]	S
	[11]	8	[31]	24
	[12]	9	[32]	25
	[13]	10	[33]	26
	[14]	11	[34]	27
	[15]	12	[35]	28
	[16]	13	[36]	29
	[17]	14	[37]	30
	[18]	15	[38]	31
	[19]	C	[39]	C
	[20]	S	[40]	S

Diagram of Internal circuit

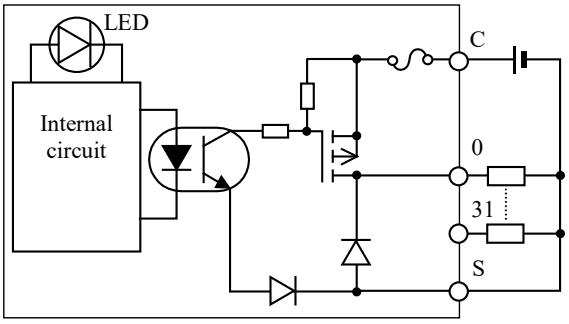

Applicable cable
- A 120 mm (4.73 in.) space is required for the front of the module. Please choose the installing location (space) accordingly.
- Use a shield cable and always use a class D grounding.

Manufacturer			
	Fujitsu Takamizawa	Solder type	Socket: FCN-361J040-AU, Cover: FCN-360C040-E
		Crimp type	Housing: FCN-363J040, Contact: FCN-363J-AU
		Pressure-displacement type	FCN-367J040-AU/F
	AMP	Solder type	1473381-1

(34) EH-YT32E

Specification		EH-YT32E
Output specification		Transistor output (sink type)
Number of output points		32 points
Rated load voltage		12 / 24 V DC (+10 %, -15 %)
Minimum switching current		1 mA
Leak current		0.1 mA
Maximum load current	1 circuit	0.2 A
	1 common	1 A
Output response time	OFF➔ON	Max. 0.3 ms
	ON➔OFF	Max. 1 ms
Insulation system		Photo-coupler insulation
Output display		LED display (green)*1
External connection		Spring type terminal block
Number of output points / commons		8 points / 1 common (Common terminal is 4 points.)
Surge removal circuit		Diode
Fuse*2		10 A / 1 common
External power supply (for supplying power to S-terminal)		12 / 24 V DC (+10 %, -15 %) (30 mA at the maximum)
Internal current consumption (5 V DC)		Approx. 90 mA
Short-circuit protection function		Available

*1 There are 16 points for each LED display. The display group is switched using a switch.
*2 The module needs to be repaired in case a fuse is blown out. But, users cannot replace the fuse.

Terminal configuration	No.	Signal name	No.	Signal name
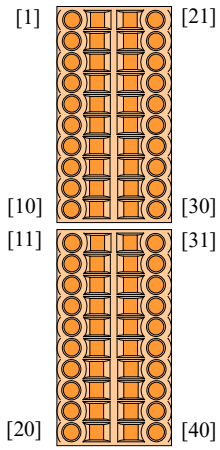	[1]	0	[21]	16
	[2]	1	[22]	17
	[3]	2	[23]	18
	[4]	3	[24]	19
	[5]	4	[25]	20
	[6]	5	[26]	21
	[7]	6	[27]	22
	[8]	7	[28]	23
	[9]	C1	[29]	C3
	[10]	S1	[30]	S3
	[11]	8	[31]	24
	[12]	9	[32]	25
	[13]	10	[33]	26
	[14]	11	[34]	27
	[15]	12	[35]	28
	[16]	13	[36]	29
	[17]	14	[37]	30
	[18]	15	[38]	31
	[19]	C2	[39]	C4
	[20]	S2	[40]	S4

Diagram of Internal circuit

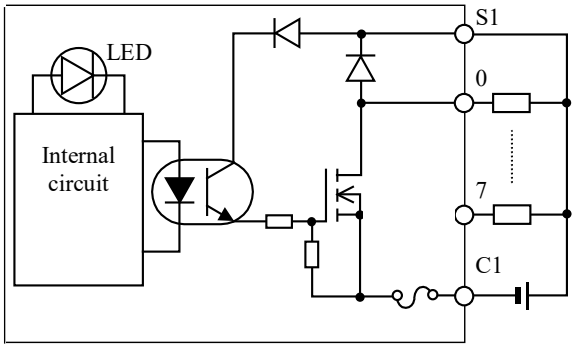

Applicable connector	Applicable cable
Manufacturer: Weidmuller Type: B2L3.5/20AUOR Product No.: 175736	0.5 mm^2 - 1.0 mm^2 (shared at a twisted pair cable and a single core cable.) AWG 28 - 18 A crimp terminal cannot be used.

(35) EH-YTP32E

Specification		EH-YTP32E
Output specification		Transistor output (source type)
Number of output points		32 points
Rated load voltage		12 / 24 V DC (+10 %, -15 %)
Minimum switching current		1 mA
Leak current		0.1 mA
Maximum load current	1 circuit	0.2 A
	1 common	1 A
Output response time	OFF➔ON	Max. 0.3 ms
	ON➔OFF	Max. 1 ms
Insulation system		Photo-coupler insulation
Output display		LED display (green)*1
External connection		Spring type terminal block
Number of output points / commons		8 points / 1 common (Common terminal is 4 points.)
Surge removal circuit		Diode
Fuse*2		10 A / 1 common
External power supply (for supplying power to S-terminal)		12 / 24 V DC (+10 %, -15 %) (30 mA at the maximum)
Internal current consumption (5 V DC)		Approx. 90 mA
Short-circuit protection function		Available

*1 There are 16 points for each LED display. The display group is switched using a switch.
*2 The module needs to be repaired in case a fuse is blown out. But, users cannot replace the fuse.

Terminal configuration	No.	Signal name	No.	Signal name
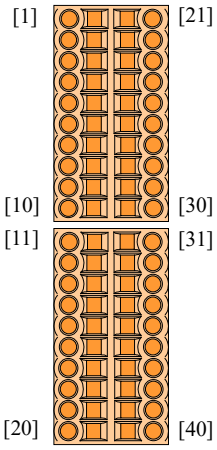	[1]	0	[21]	16
	[2]	1	[22]	17
	[3]	2	[23]	18
	[4]	3	[24]	19
	[5]	4	[25]	20
	[6]	5	[26]	21
	[7]	6	[27]	22
	[8]	7	[28]	23
	[9]	C1	[29]	C3
	[10]	S1	[30]	S3
	[11]	8	[31]	24
	[12]	9	[32]	25
	[13]	10	[33]	26
	[14]	11	[34]	27
	[15]	12	[35]	28
	[16]	13	[36]	29
	[17]	14	[37]	30
	[18]	15	[38]	31
	[19]	C2	[39]	C4
	[20]	S2	[40]	S4

Diagram of Internal circuit

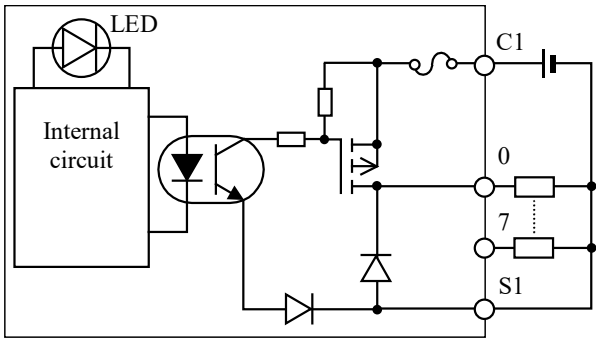

Applicable connectors	Applicable cable
Manufacturer: Weidmuller Type: B2L3.5/20AUOR Product No.: 175736	0.5 mm^2 - 1.0 mm^2 (shared at a twisted pair cable and a single core cable. AWG 28 - 18 A crimp terminal cannot be used.

(36) EH-YT32H

Item		EH-YT32H	POM-TM, POH-TM (for replacing)
Series		HX / EH-150	EM / EM-II, H-200 / 250 / 252
Output specification		Transistor output (sink type)	
Number of output points		32 points	
Rated load voltage		5 / 12 / 24 V DC (5 to 27 V DC)	
Minimum switching current		1 mA	
Leak current		Max. 0.05 mA	
Maximum output saturation voltage		Max. 1 V	
Maximum load current	1 point	0.1 A	
	1 common	0.8 A	
Output response time	OFF➔ON	Max. 1 ms	
	ON➔OFF	Max. 1 ms	
Insulation method		Photo-coupler insulation	
Output display		LED (green)*2	LED (red)
External connection		Connector (50 pins)	
Number of common points		8 points / 1 common	
Surge removal circuit		Diode (Connecting case of the S terminal)	
Fuse*1		2 A / 1 common	1.5 A / 1 common
External power supply*3 (For supplying power to the S terminal)		5 to 27 V DC (maximum 100 mA)	
Internal current consumption (5 V DC)		Approx. 90 mA	Approx. 70 mA
Short-circuit protection		None	

*1 The module needs to be repaired in case a load short causes a blown fuse. Further more, it is not allowed for user to replace a fuse as safety reason.
*2 There are 16 points for each LED display. The display group is toggled using a switch. And, LED display is renewed by refresh processing.
*3 It is necessary to supply 12 / 24 V DC to the S terminals.

Specification of external wiring connector				Wire
Product name	Manufacturer	Product No.	Connection method	
Plug connector	Hirose Electric Co., Ltd.	DX30-50P	Untie crimping	AWG#30
		DX30A-50P		AWG#28
		DX31-50P	Crimping	AWG#30
		DX31A-50P		AWG#28
		DX40-50P	Soldering	-
Die cast cover		DX-50-CV1	-	-

Terminal configuration	No.	Signal name	No.	Signal name	Diagram of Internal circuit
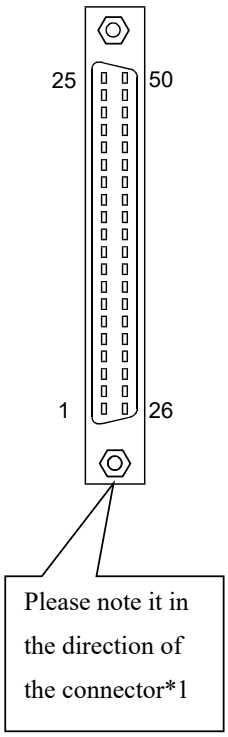	[25]	NC	[50]	NC	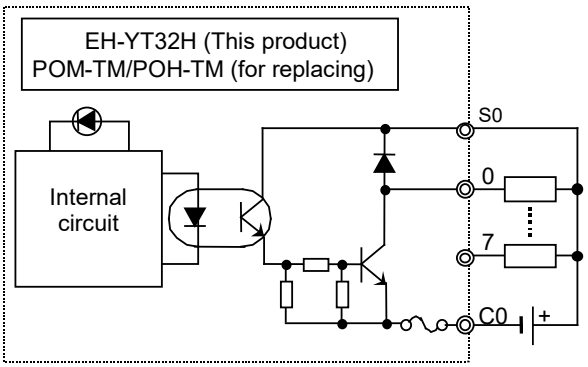
	[24]	NC	[49]	NC	
	[23]	NC	[48]	NC	
	[22]	NC	[47]	NC	
	[21]	15	[46]	31	
	[20]	14	[45]	30	
	[19]	13	[44]	29	
	[18]	12	[43]	28	
	[17]	11	[42]	27	
	[16]	10	[41]	26	
	[15]	9	[40]	25	
	[14]	8	[39]	24	
	[13]	S1	[38]	S3	
	[12]	C1	[37]	C3	
	[11]	NC	[36]	NC	
	[10]	7	[35]	23	
	[9]	6	[34]	22	
	[8]	5	[33]	21	
	[7]	4	[32]	20	
	[6]	3	[31]	19	
	[5]	2	[30]	18	
	[4]	1	[29]	17	
	[3]	0	[28]	16	
	[2]	S0	[27]	S2	
	[1]	C0	[26]	C2	

*1 EH-XD32H has a turned connector to a 32-point I/O module for EM / H-200 series. Connect an external wiring cable rotating 180 degrees around when replacing the module. (You cannot connect the cable in wrong direction due to the structure for avoiding improper connection.)

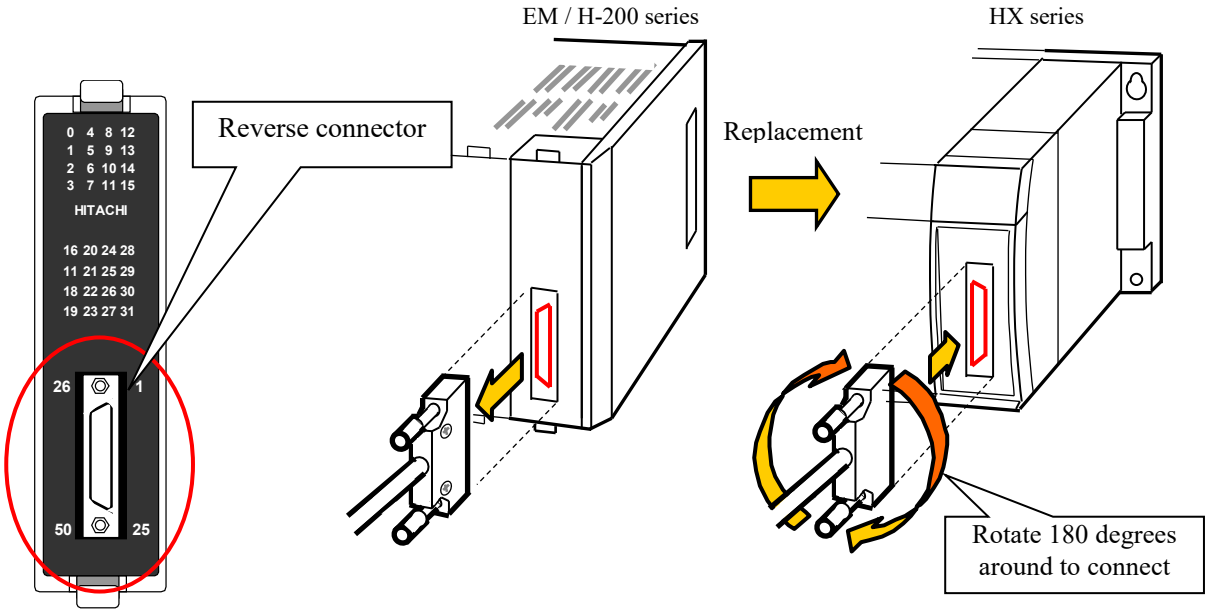

(37) EH-YTT32

Specification		EH-YTT32	Reference: YTT05BH
Output specification		Sink type transistor (TTL level output)	
Number of output points		32 points	
Rated load voltage		5 V DC (4 to 15 V DC)	
Minimum switching current		1 mA	
Leak current		Max. 50 μA	
Maximum load current	1 circuit	20 mA	
	1 common	320 mA	
Maximum voltage drop		0.2 V DC	
Output response time	OFF➔ON	Max. 1 ms	
	ON➔OFF	Max. 1 ms	
Insulation method		Photo-coupler insulation	
Output display		LED display (Green)	LED display (Red)
External connection		Connector	Removable type screw terminal block (M3)
Number of output points / common		16 (2 commons, 4 terminals)	
Surge removal circuit		Diode	
Fuse		1.6 A / 1 common *1	-
Internal current consumption		Max. 100 mA	Max. 180 mA

*1 If the fuse would blow, the module needs to be repaired. The fuse cannot be replaced.

Terminal configuration	No.	Signal name	No.	Signal name
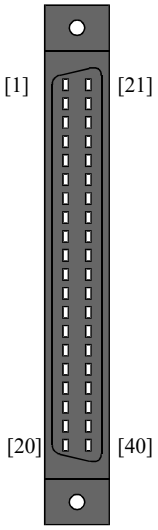	[1]	0	[21]	16
	[2]	1	[22]	17
	[3]	2	[23]	18
	[4]	3	[24]	19
	[5]	4	[25]	20
	[6]	5	[26]	21
	[7]	6	[27]	22
	[8]	7	[28]	23
	[9]	COM0	[29]	COM1
	[10]	S0	[30]	S1
	[11]	8	[31]	24
	[12]	9	[32]	25
	[13]	10	[33]	26
	[14]	11	[34]	27
	[15]	12	[35]	28
	[16]	13	[36]	29
	[17]	14	[37]	30
	[18]	15	[38]	31
	[19]	COM0	[39]	COM1
	[20]	S0	[40]	S1

Diagram of Internal circuit

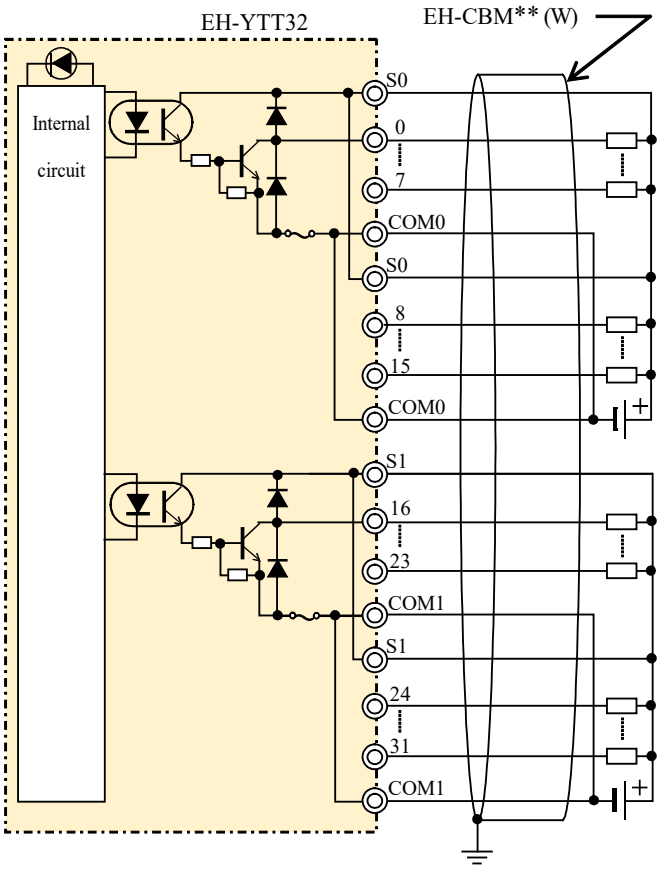

Compatible connector
Please make sure to secure 120 mm space on the front of the module.
Please use a shield cable and always use a class D grounding.

Vender			
	Fujitsu	Solder Pin type	Socket: FCN-361J040-AU, Cover: FCN-360C040-E
		Crimp type	Housing: FCN-363J040, Contact: FCN-363J-AU, Cover: FCN-360C040-E
		IDC type	Jack: FCN-367J040-AU/F
	AMP	Solder Pin type	Connector: 1473381-1

(38) EH-YT64

Specification		EH-YTP64
Output specification		Transistor output (source type)
Number of output points		64 points
Rated load voltage		12 / 24 V DC (+10 %, -15 %)
Minimum switching current		1 mA
Leak current		0.1 mA
Maximum load current	1 circuit	0.1 A
	1 common	3.2 A
Output response time	OFF➔ON	Max. 0.3 ms
	ON➔OFF	Max. 1 ms
Insulation system		Photo-coupler insulation
Output display		LED display (green)*1
External connection		Connector
Number of output points / commons		32 points / 1 common (Common terminal is 4 points each.)
Surge removal circuit		Diode
Fuse*2		5 A / 1 common
External power supply (for supplying power to S-terminal)		12 / 24 V DC (+10 %, -15 %) (100 mA at the maximum)
Internal current consumption (5 V DC)		Approx. 120 mA
Short-circuit protection function		Available

*1 There are 16 points for each LED display. The display group is switched using a switch.
*2 The module needs to be repaired in case a fuse is blown out. But, users cannot replace the fuse.

Terminal configuration

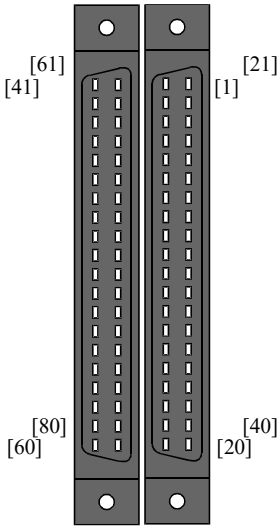

No.	Signal name	No.	Signal name	No.	Signal name	No.	Signal name
[41]	32	[61]	48	[1]	0	[21]	16
[42]	33	[62]	49	[2]	1	[22]	17
[43]	34	[63]	50	[3]	2	[23]	18
[44]	35	[64]	51	[4]	3	[24]	19
[45]	36	[65]	52	[5]	4	[25]	20
[46]	37	[66]	53	[6]	5	[26]	21
[47]	38	[67]	54	[7]	6	[27]	22
[48]	39	[68]	55	[8]	7	[28]	23
[49]	C2	[69]	C2	[9]	C1	[29]	C1
[50]	S2	[70]	S2	[10]	S1	[30]	S1
[51]	40	[71]	56	[11]	8	[31]	24
[52]	41	[72]	57	[12]	9	[32]	25
[53]	42	[73]	58	[13]	10	[33]	26
[54]	43	[74]	59	[14]	11	[34]	27
[55]	44	[75]	60	[15]	12	[35]	28
[56]	45	[76]	61	[16]	13	[36]	29
[57]	46	[77]	62	[17]	14	[37]	30
[58]	47	[78]	63	[18]	15	[38]	31
[59]	C2	[79]	C2	[19]	C1	[39]	C1
[60]	S2	[80]	S2	[20]	S1	[40]	S1

Diagram of Internal circuit

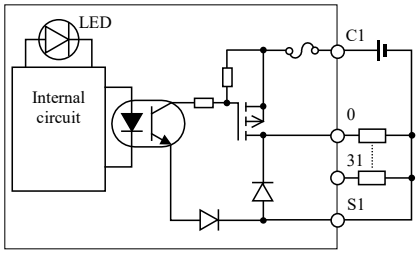

Applicable connectors
- A 120 mm (4.73 in.) space is required for the front of the module. Please choose the installing location (space) accordingly.
- Use a shield cable and always use a class D grounding.

Manufacturer	Fujitsu Takamizawa	Solder type	Socket: FCN-361J040-AU, Cover: FCN-360C040-E
		Crimp type	Housing: FCN-363J040, Contact: FCN-363J-AU
		Pressure-displacement type	Jack: FCN-367J040-AU/F
	AMP	Solder type	Connector: 1473381-1

(39) EH-YTP64

Specification		EH-YTP64
Output specification		Transistor output (source type)
Number of output points		64 points
Rated load voltage		12 / 24 V DC (+10 %, -15 %)
Minimum switching current		1 mA
Leak current		0.1 mA
Maximum load current	1 circuit	0.1 A
	1 common	3.2 A
Output response time	OFF➔ON	Max. 0.3 ms
	ON➔OFF	Max. 1 ms
Insulation system		Photo-coupler insulation
Output display		LED display (green)*1
External connection		Connector
Number of output points / commons		32 points / 1 common (Common terminal is 4 points each.)
Surge removal circuit		Diode
Fuse*2		5 A / 1 common
External power supply (for supplying power to S-terminal)		12 / 24 V DC (+10 %, -15 %) (100 mA at the maximum)
Internal current consumption (5 V DC)		Approx. 120 mA
Short-circuit protection function		Available

*1 There are 16 points for each LED display. The display group is switched using a switch.
*2 The module needs to be repaired in case a fuse is blown out. But, users cannot replace the fuse.

Terminal configuration

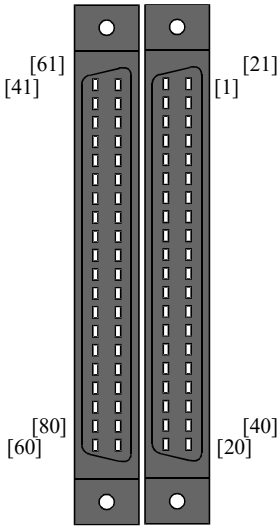

No.	Signal name	No.	Signal name	No.	Signal name	No.	Signal name
[41]	32	[61]	48	[1]	0	[21]	16
[42]	33	[62]	49	[2]	1	[22]	17
[43]	34	[63]	50	[3]	2	[23]	18
[44]	35	[64]	51	[4]	3	[24]	19
[45]	36	[65]	52	[5]	4	[25]	20
[46]	37	[66]	53	[6]	5	[26]	21
[47]	38	[67]	54	[7]	6	[27]	22
[48]	39	[68]	55	[8]	7	[28]	23
[49]	C2	[69]	C2	[9]	C1	[29]	C1
[50]	S2	[70]	S2	[10]	S1	[30]	S1
[51]	40	[71]	56	[11]	8	[31]	24
[52]	41	[72]	57	[12]	9	[32]	25
[53]	42	[73]	58	[13]	10	[33]	26
[54]	43	[74]	59	[14]	11	[34]	27
[55]	44	[75]	60	[15]	12	[35]	28
[56]	45	[76]	61	[16]	13	[36]	29
[57]	46	[77]	62	[17]	14	[37]	30
[58]	47	[78]	63	[18]	15	[38]	31
[59]	C2	[79]	C2	[19]	C1	[39]	C1
[60]	S2	[80]	S2	[20]	S1	[40]	S1

Diagram of Internal circuit

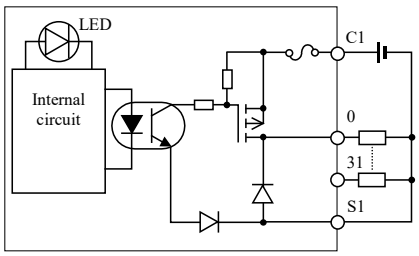

Applicable connectors
- A 120 mm (4.73 in.) space is required for the front of the module. Please choose the installing location (space) accordingly.
- Use a shield cable and always use a class D grounding.

Manufacturer	Fujitsu Takamizawa	Solder type	Socket: FCN-361J040-AU, Cover: FCN-360C040-E
		Crimp type	Housing: FCN-363J040, Contact: FCN-363J-AU
		Pressure-displacement type	Jack: FCN-367J040-AU/F
	AMP	Solder type	Connector: 1473381-1

(40) EH-MTT32

Specification		EH-MTT32		Reference: PHM-TT	
Input / output type		TTL input (sink type)	TTL output (sink type)	TTL input (sink type)	TTL output (sink type)
Number of input / output points		16 points	16 points	16 points	16 points
Input / output voltage		4 to 27 V DC			
Input current		Approx. 6 mA (5 V DC)	-	Approx. 6 mA (5 V DC)	-
Operating voltage	ON voltage	Max. 1.5 V (5 V DC)	-	Max. 1.5 V (5 V DC)	-
	OFF voltage	Min. 3.5 V (5 V DC)	-	Min. 3.5 V (5 V DC)	-
Maximum load current		-	20 mA / point	-	20 mA / point
Minimum load current		-	1 mA / point	-	1 mA / point
Maximum leak current		-	50 μA	-	50 μA
Output response time	OFF → ON	Max. 1 ms			
	ON → OFF	Max. 1 ms			
Insulation method		Photo-coupler insulation			
Input / output display		LED display (Green)		-	
External connection		Connector (Compatible with PHM-TT)			
Number of I/O points / common		16 points / common	8 points / common	16 points / common	8 points / common
Fuse *1		0.63 A	1.6 A	-	1.5 A
Internal current consumption		Approx. 0.14 A		Approx. 0.1 A	
External power supply capacity (terminal S)		4 to 27 V DC (Max. 0.2 A)	4 to 27 V DC (Max. 0.2 A)	4 to 27 V DC (Max. 0.2 A)	4 to 27 V DC (Max. 0.2 A)

*1 If the fuse would blow, the module needs to be repaired. The fuse cannot be replaced.

Terminal configuration

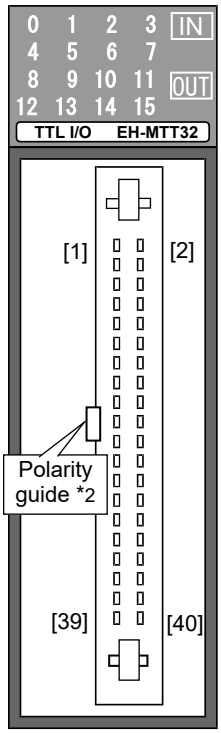

Input		Output	
No.	Signal name	No.	Signal name
[1]	C0	[2]	C1 *3
[3]	S0	[4]	S1 *3
[5]	0	[6]	16
[7]	1	[8]	17
[9]	2	[10]	18
[11]	3	[12]	19
[13]	4	[14]	20
[15]	5	[16]	21
[17]	6	[18]	22
[19]	7	[20]	23
[21]	NC *1	[22]	C2 *3
[23]	NC *1	[24]	S2 *3
[25]	8	[26]	24
[27]	9	[28]	25
[29]	10	[30]	26
[31]	11	[32]	27
[33]	12	[34]	28
[35]	13	[36]	29
[37]	14	[38]	30
[39]	15	[40]	31

Diagram of Internal circuit

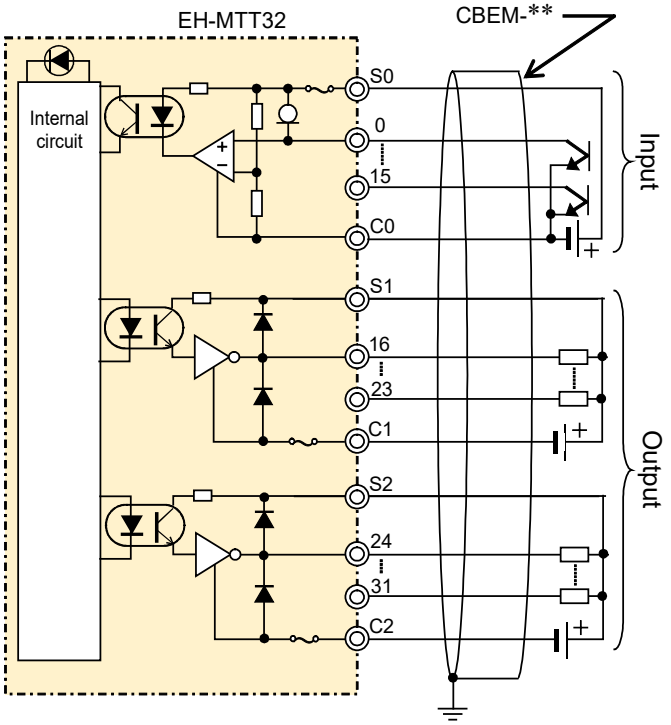

*1 NC is not internally connected.
*2 The polarity guide is located on the left side. Please pay attention to the direction of the connector.
*3 The Terminal S1 and S2, C1 and C2 are independent, respectively.

External wiring connector specifications (recommended)

The external wiring connector is compatible with EM and H-200 series TTL input / output module (PHM-TT). The connector is not bundled. Please purchase it separately or directly from the following manufacturer.

Item	Manufacturer	Product number	Termination	Compatible wire
Socket (with Polarizing Guide)	HIROSE ELECTRIC	HIF3BA-40D-2.54R	IDC	AWG #28 flat cable UL2651 (7 / 0.127 mm, Outer diameter 0.9±0.1 mm)
Housing (Crimp)		HIF3BA-40D-2.54C	Discrete-wire crimping	AWG #20 - AWG #28
Gold-plating discrete terminal		HIF3-2226SC		AWG #22 - AWG #26
		HIF3-2428SC		AWG #24 - AWG #28
		HIF3-2022SC		AWG #20 - AWG #22
Crimping case cover		HIF3-40CV(71)	-	Maximum outer diameter ϕ 1.6 mm

Please make sure to secure at least 70 mm space on the front of the module. However, in the case of replacement, the depth dimension is almost the same as shown in the figure on the right.

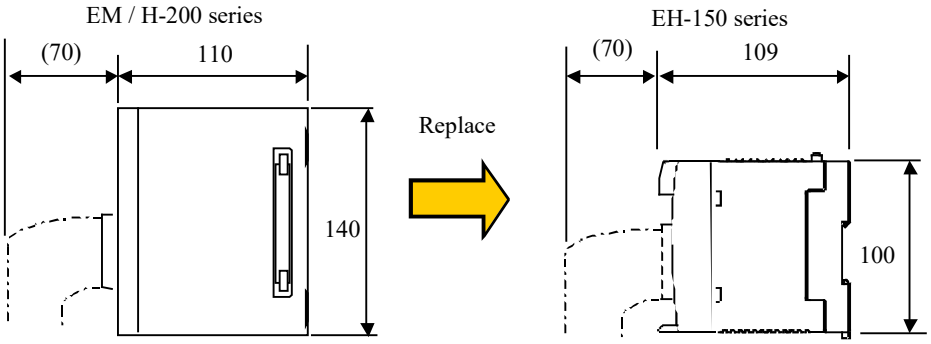

Wiring to meet CE marking

Please connect unused wires to the common. Otherwise, it may induce external noise and cause an unexpected behavior.

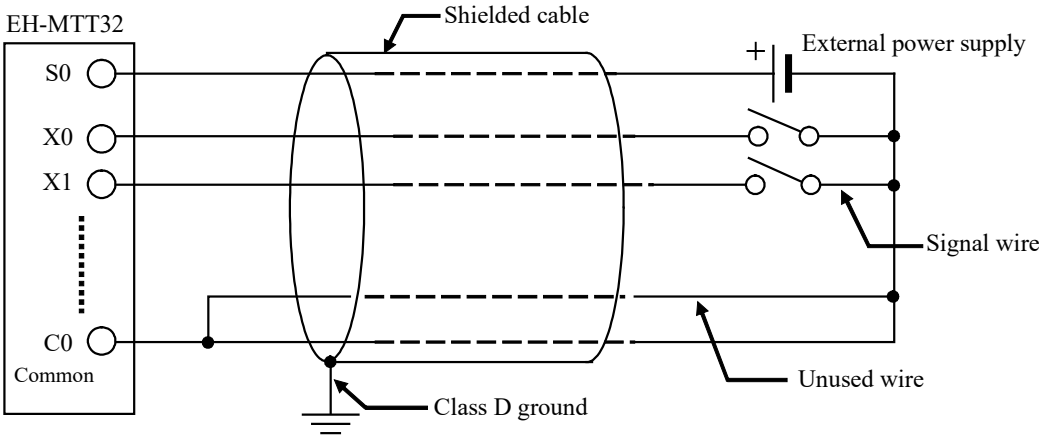

(41) EH-MTT32A

Specification		EH-MTT32A	
Input / output specification		TTL input (sink type)	TTL output (sink type)
Number of input / output points		16 points	16 points
Input / output voltage		3 to 15 V DC	4 to 15 V DC
Input current		Approx. 5 mA (5 V DC)	-
Operating voltage	ON voltage	Max. 1.5 V (5 V DC)	-
	OFF voltage	Min. 3.5 V (5 V DC)	-
Maximum load current		—	20 mA / point
Minimum load current		—	1 mA / point
Maximum leak current		—	50 μA
Input / output response time	OFF➔ON	Max. 1 ms	
	ON➔OFF	Max. 1 ms	
Insulation method		Photo-coupler insulation	
Input / output display		LED display (Green)	
External connection		Connector	
Number of I/O points / common		16 points (2 commons, 4 terminals)	
Fuse *1		0.63 A / 1 common	1.6 A / 1 common
External power supply capacity (terminal S)		Max. 0.12 A (5 V DC), Max. 0.2 A (15 V DC)	Max. 0.02 A
Internal current consumption		Approx. 90 mA	

*1 If the fuse would blow, the module needs to be repaired. The fuse cannot be replaced.

Terminal configuration

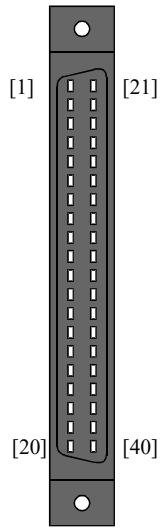

Input No.	Input Signal name	Output No.	Output Signal name
[1]	0	[21]	16
[2]	1	[22]	17
[3]	2	[23]	18
[4]	3	[24]	19
[5]	4	[25]	20
[6]	5	[26]	21
[7]	6	[27]	22
[8]	7	[28]	23
[9]	COM0	[29]	COM1
[10]	S0	[30]	S1
[11]	8	[31]	24
[12]	9	[32]	25
[13]	10	[33]	26
[14]	11	[34]	27
[15]	12	[35]	28
[16]	13	[36]	29
[17]	14	[37]	30
[18]	15	[38]	31
[19]	COM0	[39]	COM1
[20]	S0	[40]	S1

Diagram of Internal circuit

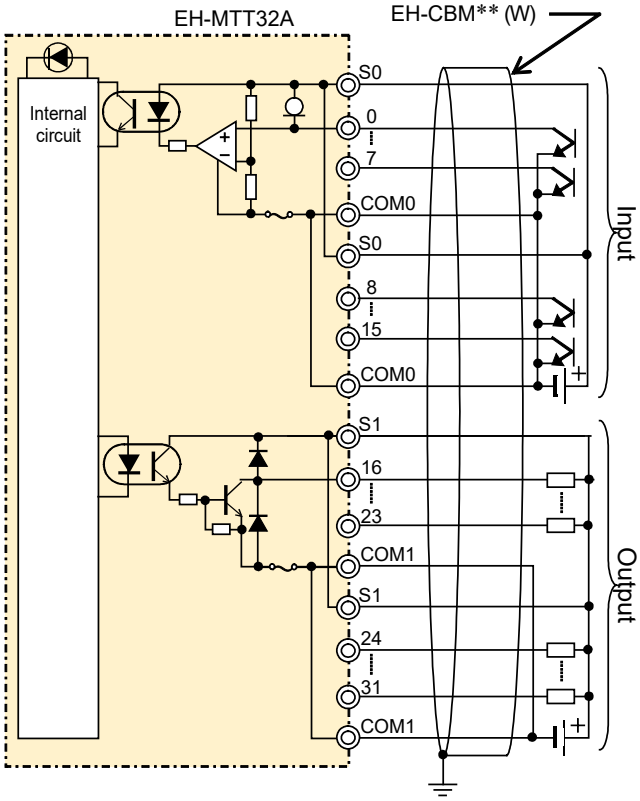

Compatible connector
Please make sure to secure 120 mm space on the front of the module.
Please use a shield cable and always use a class D grounding.

Vender			
	Fujitsu	Solder Pin type	Socket: FCN-361J040-AU, Cover: FCN-360C040-E
		Crimp type	Housing: FCN-363J040, Contact: FCN-363J-AU, Cover: FCN-360C040-E
		IDC type	Jack: FCN-367J040-AU/F
	AMP	Solder Pin type	Connector: 1473381-1

Chapter 7 Analog I/O Module, Resistance Temperature Detector Input Module, Thermocouple Input Module

7.1 12-bit Analog I/O Module

Name and function of each part		
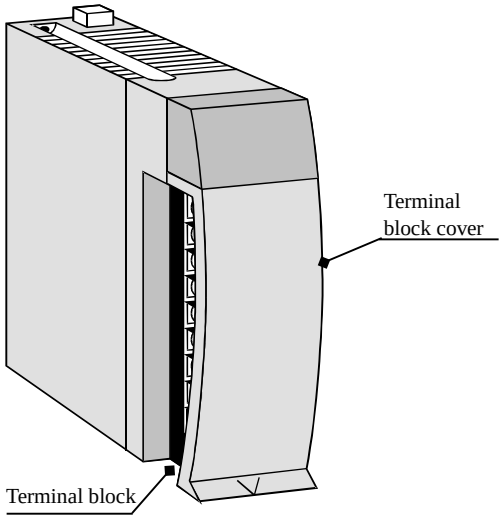	Type (Weight)	EH-AX44 (Approx. 0.18 kg (0.41 lb))
		EH-AX8V, AX8H (Approx. 0.18 kg (0.41 lb))
		EH-AX8I, AX8IO (Approx. 0.18 kg (0.41 lb))
		EH-AY22 (Approx. 0.18 kg (0.41 lb))
		EH-AY2H (Approx. 0.18 kg (0.41 lb))
		EH-AY4V, AY4H (Approx. 0.18 kg (0.41 lb))
		EH-AY4I (Approx. 0.18 kg (0.41 lb))
	Dimensions (mm (in.))	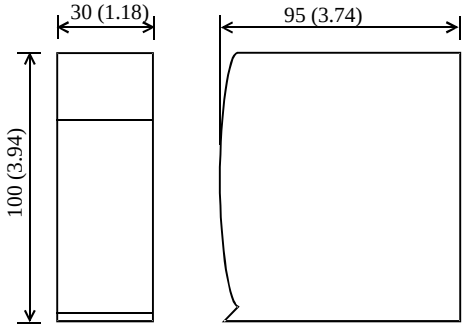

Item	Description
Terminal block	This is a terminal block for connecting the I/O signals. The terminal block is removable. Screws for the terminal block are M3 screw. Use a crimp terminal fitting to the screw diameter. The maximum thickness of the cable should be 0.75 mm^2. (Use a 0.5 mm^2 cable when attaching two crimp terminals to the same terminal.) Recommended crimp terminal is shown below. 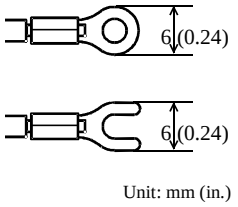 (Recommended) Take great care on handling the terminal because it may fall off if the screw is loose. 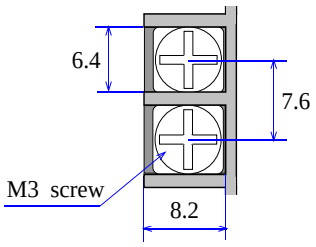
Terminal block cover	This is a covert for installing on the terminal block.

(1) EH-AX44

Specification		EH-AX44
Current range		4 to 20 mA
Voltage range		0 to 10 V DC
Number of channels	Current	4 (0 to 3 channels)
	Voltage	4 (4 to 7 channels)
Resolution		12 bits
Conversion time		Max. 5 ms
Overall accuracy		Max. ±1 % (of full-scale value)
Input impedance	Current	Approx. 100 Ω
	Voltage	Approx. 100 kΩ
Insulation system	Channel and Internal circuit	Photo-coupler insulation
	Between channels	No insulation
External connection		Removable type screw terminal block (M3)
External power supply		24 V DC (+20 %, -15 %) Approx. 150 mA (Approx. 400 mA at power ON)
External wiring		2-core shield cable (Max. 20 m (65.62 ft.))
Internal current consumption		Approx. 100 mA

Terminal configuration	No.	Signal name	Diagram of Internal circuit
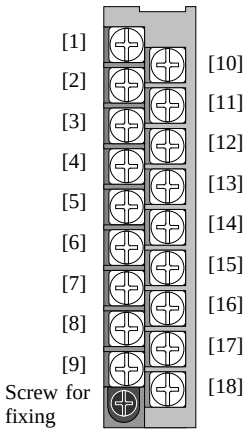	[1]	I0 +	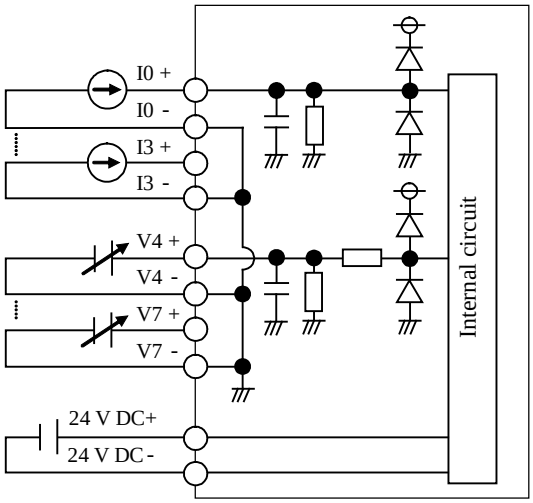
	[2]	I1 +	
	[3]	I2 +	
	[4]	I3 +	
	[5]	V4 +	
	[6]	V5 +	
	[7]	V6 +	
	[8]	V7 +	
	[9]	24 V DC +	
	[10]	I0 -	
	[11]	I1 -	
	[12]	I2 -	
	[13]	I3 -	
	[14]	V4 -	
	[15]	V5 -	
	[16]	V6 -	
	[17]	V7 -	
	[18]	24 V DC -	

Support to analog data and digital data

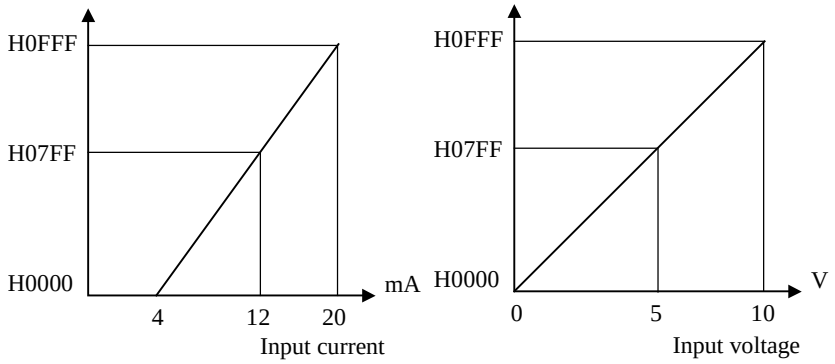

(2) EH-AX8V

Specification		EH-AX8V
Current range		-
Voltage range		0 to 10 V DC
Number of channels	Current	-
	Voltage	8 (0 to 7 channels)
Resolution		12 bits
Conversion time		Max. 5 ms
Overall accuracy		Max. ±1 % (of full-scale value)
Input impedance	Current	-
	Voltage	Approx. 100 kΩ
Insulation system	Channel and Internal circuit	Photo-coupler insulation
	Between channels	No insulation
External connection		Removable type screw terminal block (M3)
External power supply		24 V DC (+20 %, -15 %) Approx. 150 mA (Approx. 400 mA at power ON)
External wiring		2-core shield cable (Max. 20 m)
Internal current consumption		Approx. 100 mA

Terminal configuration	No.	Signal name	Diagram of Internal circuit
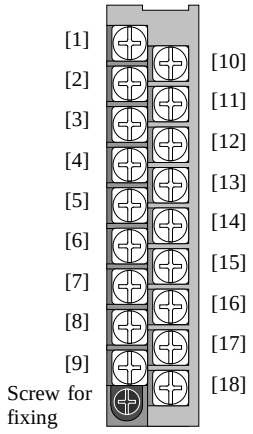	[1]	V0 +	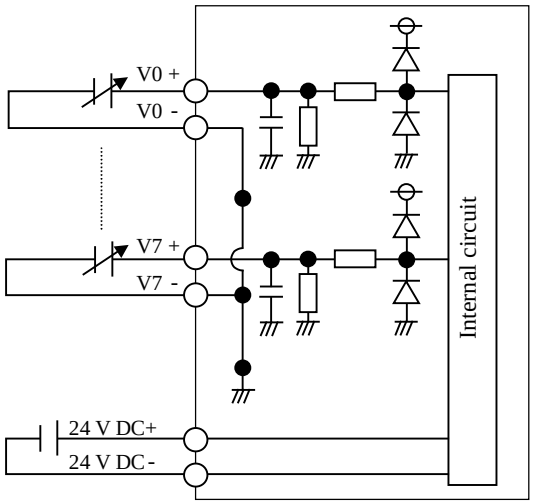
	[2]	V1 +	
	[3]	V2 +	
	[4]	V3 +	
	[5]	V4 +	
	[6]	V5 +	
	[7]	V6 +	
	[8]	V7 +	
	[9]	24 V DC +	
	[10]	V0 -	
	[11]	V1 -	
	[12]	V2 -	
	[13]	V3 -	
	[14]	V4 -	
	[15]	V5 -	
	[16]	V6 -	
	[17]	V7 -	
	[18]	24 V DC -	

Support to analog data and digital data

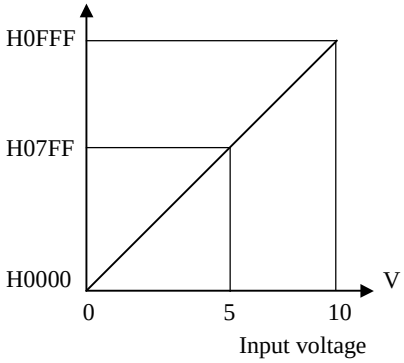

(3) EH-AX8H

Specification		EH-AX8H
Current range		-
Voltage range		+ / - 10 V DC
Number of channels	Current	-
	Voltage	8 (0 to 7 channels)
Resolution		12 bits
Conversion time		Max. 5 ms
Overall accuracy		Max. ±1 % (of full-scale value)
Input impedance	Current	-
	Voltage	Approx. 100 kΩ
Insulation system	Channel and Internal circuit	Photo-coupler insulation
	Between channels	No insulation
External connection		Removable type screw terminal block (M3)
External power supply		24 V DC (+20 %, -15 %) Approx. 150 mA (Approx. 400 mA at power ON)
External wiring		2-core shield cable (Max. 20 m)
Internal current consumption		Approx. 100 mA

Terminal configuration	No.	Signal name	Diagram of Internal circuit
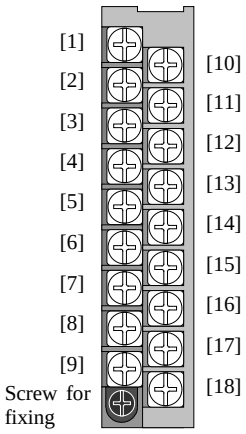	[1]	V0 +	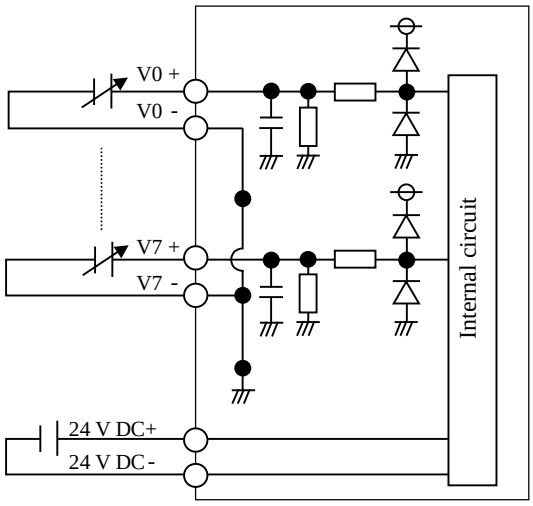
	[2]	V1 +	
	[3]	V2 +	
	[4]	V3 +	
	[5]	V4 +	
	[6]	V5 +	
	[7]	V6 +	
	[8]	V7 +	
	[9]	24 V DC +	
	[10]	V0 -	
	[11]	V1 -	
	[12]	V2 -	
	[13]	V3 -	
	[14]	V4 -	
	[15]	V5 -	
	[16]	V6 -	
	[17]	V7 -	
	[18]	24 V DC -	

Support to analog data and digital data

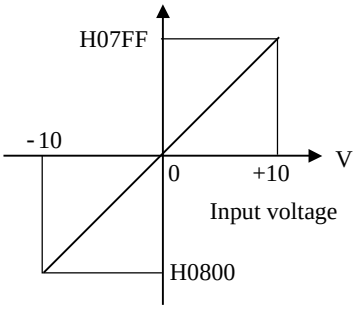

(A complement of 2)

(4) EH-AX8I

Specification		EH-AX8I
Current range		4 to 20 mA
Voltage range		-
Number of channels	Current	8 (0 to 7 channels)
	Voltage	-
Resolution		12 bits
Conversion time		Max. 5 ms
Overall accuracy		Max. ±1 % (of full-scale value)
Input impedance	Current	Approx. 100 Ω
	Voltage	-
Insulation system	Channel and Internal circuit	Photo-coupler insulation
	Between channels	No insulation
External connection		Removable type screw terminal block (M3)
External power supply		24 V DC (+20 %, -15 %) Approx. 150 mA (Approx. 400 mA at power ON)
External wiring		2-core shield cable (Max. 20 m)
Internal current consumption		Approx. 100 mA

Terminal configuration	No.	Signal name	Diagram of Internal circuit
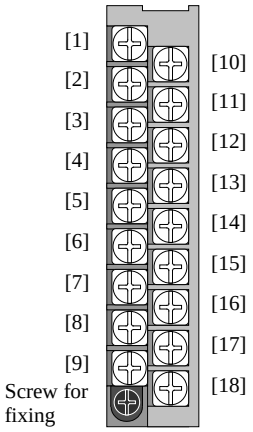	[1]	I0 +	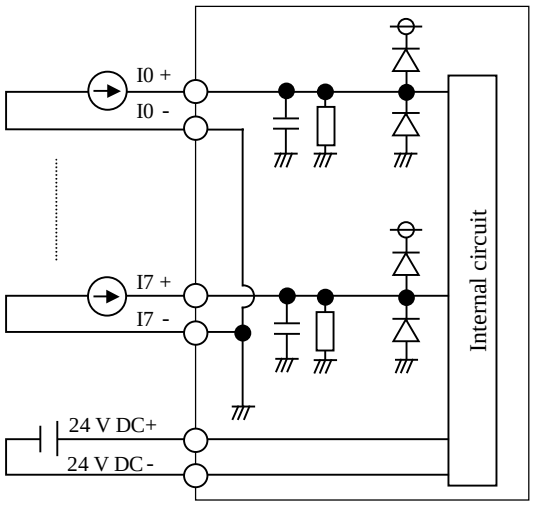
	[2]	I1 +	
	[3]	I2 +	
	[4]	I3 +	
	[5]	I4 +	
	[6]	I5 +	
	[7]	I6 +	
	[8]	I7 +	
	[9]	24 V DC +	
	[10]	I0 -	
	[11]	I1 -	
	[12]	I2 -	
	[13]	I3 -	
	[14]	I4 -	
	[15]	I5 -	
	[16]	I6 -	
	[17]	I7 -	
	[18]	24 V DC -	

Support to analog data and digital data

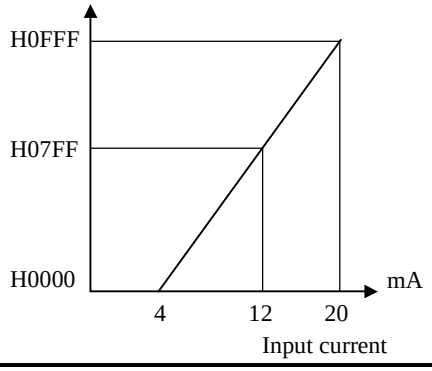

(5) EH-AX8IO

Specification		EH-AX8IO
Current range		0 to 22 mA
Voltage range		-
Number of channels	Current	8 (0 to 7 channels)
	Voltage	-
Resolution		12 bits
Conversion time		Max. 5 ms
Overall accuracy		Max. ±1% (of full-scale value)
Input impedance	Current	Approx. 100 Ω
	Voltage	-
Insulation system	Channel and Internal circuit	Photo-coupler insulation
	Between channels	No insulation
External connection		Removable type screw terminal block (M3)
External power supply		24 V DC (+20 %, -15 %) Approx. 150 mA (Approx. 400 mA at power ON)
External wiring		2-core shield cable (Max. 20 m)
Internal current consumption		Approx. 100 mA

Terminal configuration	No.	Signal name	Diagram of Internal circuit
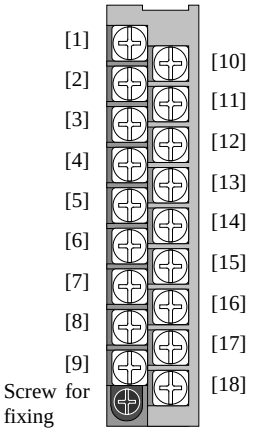	[1]	I0 +	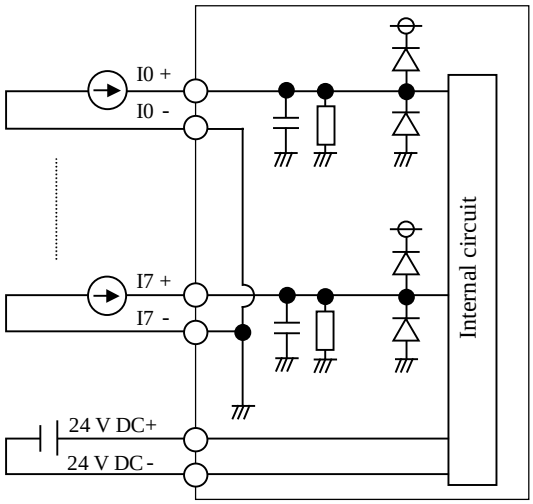
	[2]	I1 +	
	[3]	I2 +	
	[4]	I3 +	
	[5]	I4 +	
	[6]	I5 +	
	[7]	I6 +	
	[8]	I7 +	
	[9]	24 V DC +	
	[10]	I0 -	
	[11]	I1 -	
	[12]	I2 -	
	[13]	I3 -	
	[14]	I4 -	
	[15]	I5 -	
	[16]	I6 -	
	[17]	I7 -	
	[18]	24 V DC -	

Support to analog data and digital data

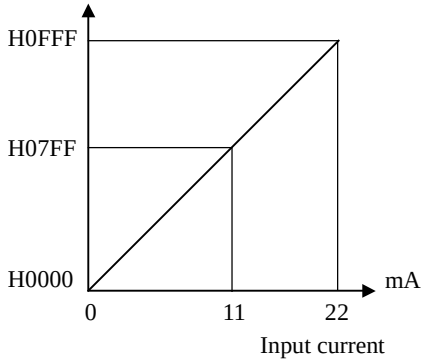

(6) EH-AY22

Specification		EH-AY22
Current range		4 to 20 mA
Voltage range		0 to 10 V DC
Number of channels	Current	2 (2 to 3 channels)
	Voltage	2 (0 to 1 channels)
Resolution		12 bits
Conversion time		Max. 5 ms
Overall accuracy		Max. ±1 % (of full-scale value)
External load resistance	Current	0 to 500 Ω
	Voltage	Min. 10 kΩ
Insulation system	Channel and Internal circuit	Photo-coupler insulation
	Between channels	No insulation
External connection		Removable type screw terminal block (M3)
External power supply		24 V DC (+20 %, -15 %) Approx. 150 mA (Approx. 500 mA at power ON)
External wiring		2-core shield cable (Max. 20 m)
Internal current consumption		Approx. 100 mA

Terminal configuration	No.	Signal name	Diagram of Internal circuit
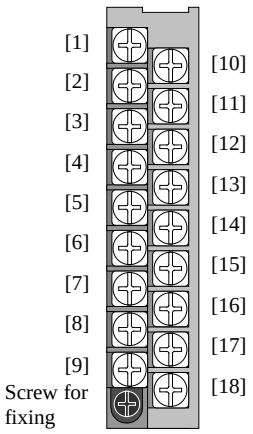	[1]	V0 +	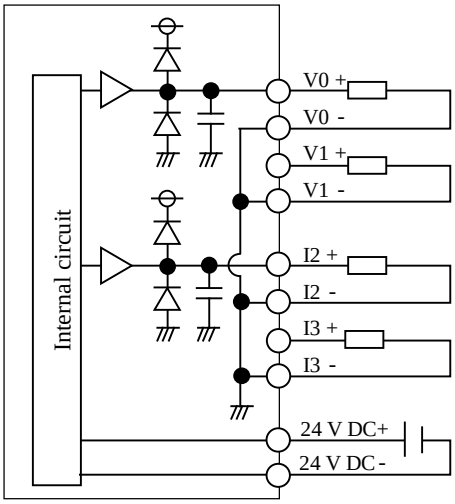
	[2]	V1 +	
	[3]	I2 +	
	[4]	I3 +	
	[5]	N.C.	
	[6]	N.C.	
	[7]	N.C.	
	[8]	N.C.	
	[9]	24 V DC +	
	[10]	V0 -	
	[11]	V1 -	
	[12]	I2 -	
	[13]	I3 -	
	[14]	N.C.	
	[15]	N.C.	
	[16]	N.C.	
	[17]	N.C.	
	[18]	24 V DC -	

Support to analog data and digital data

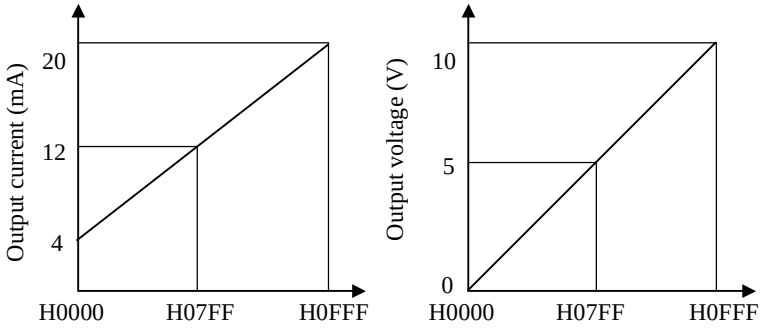

(7) EH-AY2H

Specification		EH-AY2H
Current range		-
Voltage range		+ / - 10 V DC
Number of channels	Current	-
	Voltage	2 (0 to 1 channels)
Resolution		12 bits
Conversion time		Max. 5 ms
Overall accuracy		Max. ±1 % (of full-scale value)
External load resistance	Current	-
	Voltage	10 kΩ or more
Insulation system	Channel and Internal circuit	Photo-coupler insulation
	Between channels	No insulation
External connection		Removable type screw terminal block (M3)
External power supply		24 V DC (+20 %, -15 %) Approx. 150 mA (Approx. 500 mA at power ON)
External wiring		2-core shield cable (Max. 20 m)
Internal current consumption		Approx. 100 mA

Terminal configuration	No.	Signal name	Diagram of Internal circuit
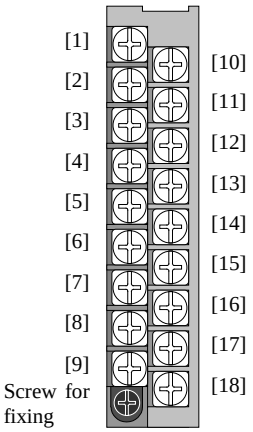	[1]	V0 +	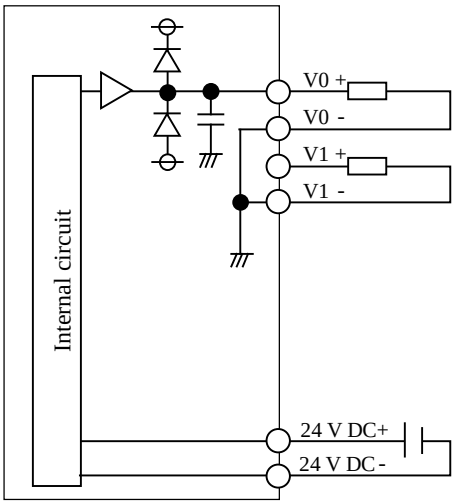
	[2]	V1 +	
	[3]	N.C.	
	[4]	N.C.	
	[5]	N.C.	
	[6]	N.C.	
	[7]	N.C.	
	[8]	N.C.	
	[9]	24 V DC +	
	[10]	V0 -	
	[11]	V1 -	
	[12]	N.C.	
	[13]	N.C.	
	[14]	N.C.	
	[15]	N.C.	
	[16]	N.C.	
	[17]	N.C.	
	[18]	24 V DC -	

Support to analog data and digital data

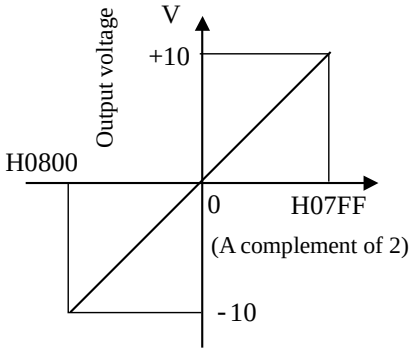

(8) EH-AY4I

Specification		EH-AY4I
Current range		4 to 20 mA
Voltage range		-
Number of channels	Current	4 (0 to 3 channels)
	Voltage	-
Resolution		12 bits
Conversion time		Max. 5 ms
Overall accuracy		Max. ±1 % (of full-scale value)
External load resistance	Current	0 to 350 Ω
	Voltage	-
Insulation system	Channel and Internal circuit	Photo-coupler insulation
	Between channels	No insulation
External connection		Removable type screw terminal block (M3)
External power supply		24 V DC (+20 %, -15 %) Approx. 150 mA (Approx. 500 mA at power ON)
External wiring		2-core shield cable (Max. 20 m)
Internal current consumption		Approx. 130 mA

Terminal configuration	No.	Signal name	Diagram of Internal circuit
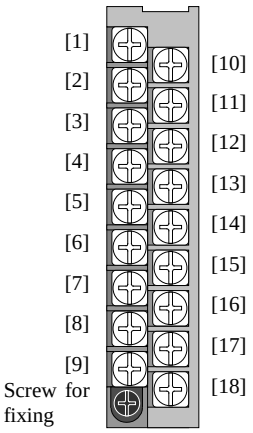	[1]	I0 +	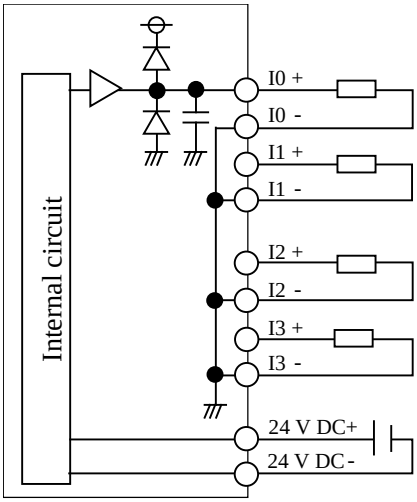
	[2]	I1 +	
	[3]	I2 +	
	[4]	I3 +	
	[5]	N.C.	
	[6]	N.C.	
	[7]	N.C.	
	[8]	N.C.	
	[9]	24 V DC +	
	[10]	I0 -	
	[11]	I1 -	
	[12]	I2 -	
	[13]	I3 -	
	[14]	N.C.	
	[15]	N.C.	
	[16]	N.C.	
	[17]	N.C.	
	[18]	24 V DC -	

Support to analog data and digital data

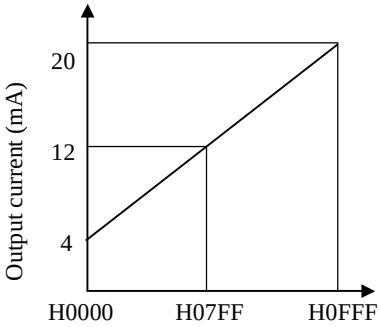

(9) EH-AY4V

Specification		EH-AY4V
Current range		-
Voltage range		0 to 10 V DC
Number of channels	Current	-
	Voltage	4 (0 to 3 channels)
Resolution		12 bits
Conversion time		Max. 5 ms
Overall accuracy		Max. ±1 % (of full-scale value)
External load resistance	Current	-
	Voltage	10 kΩ or more
Insulation system	Channel and Internal circuit	Photo-coupler insulation
	Between channels	No insulation
External connection		Removable type screw terminal block (M3)
External power supply		24 V DC (+20 %, -15 %) Approx. 150 mA (Approx. 500 A at power ON)
External wiring		2-core shield cable (Max. 20 m)
Internal current consumption		Approx. 100 mA

Terminal configuration	No.	Signal name	Diagram of Internal circuit
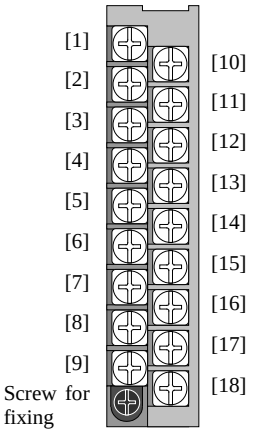	[1]	V0 +	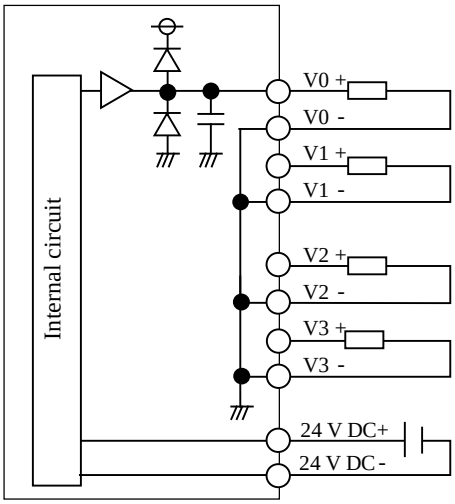
	[2]	V1 +	
	[3]	V2 +	
	[4]	V3 +	
	[5]	N.C.	
	[6]	N.C.	
	[7]	N.C.	
	[8]	N.C.	
	[9]	24 V DC +	
	[10]	V0 -	
	[11]	V1 -	
	[12]	V2 -	
	[13]	V3 -	
	[14]	N.C.	
	[15]	N.C.	
	[16]	N.C.	
	[17]	N.C.	
	[18]	24 V DC -	

Support to analog data and digital data

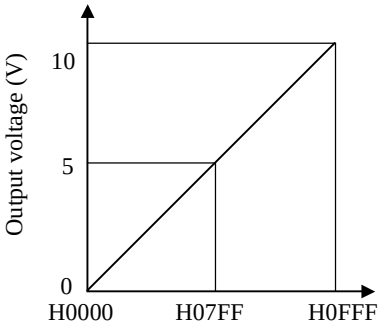

(10) EH-AY4H

Specification		EH-AY4H
Current range		-
Voltage range		+ / - 10 V DC
Number of channels	Current	-
	Voltage	4 (0 to 3 channels)
Resolution		12 bits
Conversion time		Max. 5 ms
Overall accuracy		Max. ±1 % (of full-scale value)
External load resistance	Current	-
	Voltage	Min. 10 kΩ
Insulation system	Channel and Internal circuit	Photo-coupler insulation
	Between channels	No insulation
External connection		Removable type screw terminal block (M3)
External power supply		24 V DC (+20 %, -15 %) Approx. 150 mA (Approx. 500 mA at power ON)
External wiring		2-core shield cable (Max. 20 m)
Internal current consumption		Approx. 100 mA

Terminal configuration	No.	Signal name	Diagram of Internal circuit
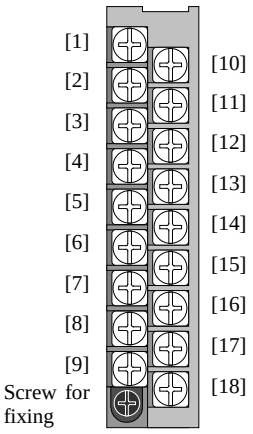	[1]	V0 +	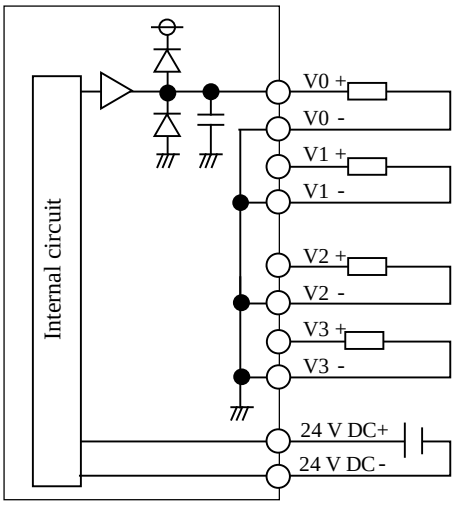
	[2]	V1 +	
	[3]	V2 +	
	[4]	V3 +	
	[5]	N.C.	
	[6]	N.C.	
	[7]	N.C.	
	[8]	N.C.	
	[9]	24 V DC +	
	[10]	V0 -	
	[11]	V1 -	
	[12]	V2 -	
	[13]	V3 -	
	[14]	N.C.	
	[15]	N.C.	
	[16]	N.C.	
	[17]	N.C.	
	[18]	24 V DC -	

Support for analog data and digital data

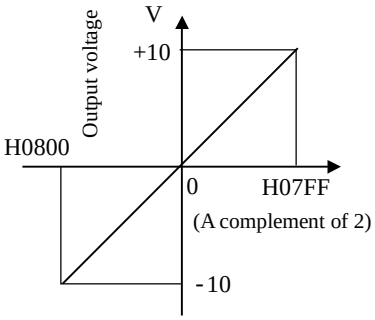

7.2 14-bit Analog I/O Module

Name and function of each part		
EH-AXH8M 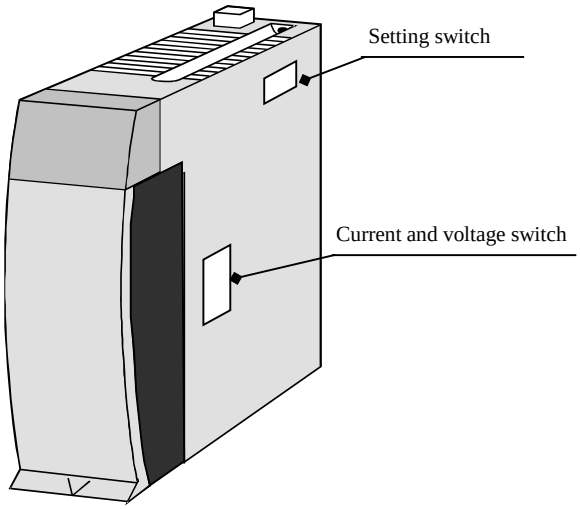 	Type (Weight)	EH-AXH8M (Approx. 0.15 kg (0.34 lb)) EH-AYH8M (Approx. 0.18 kg (0.41 lb))
	Dimensions (mm (in.))	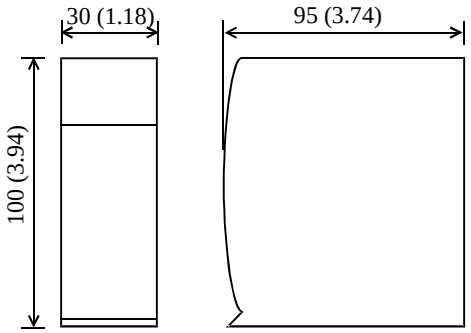
EH-AYH8M 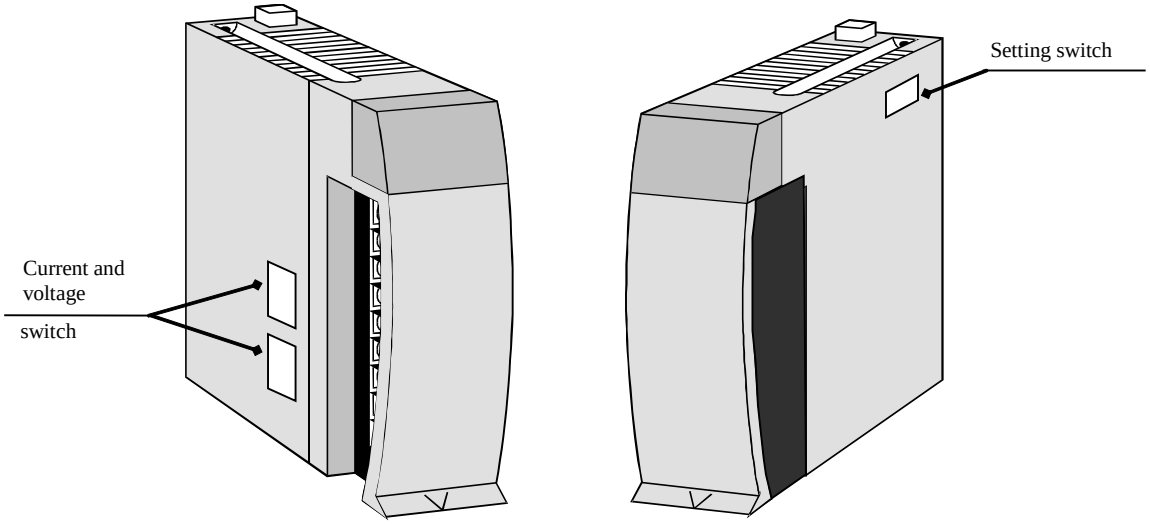 		

Name	Description
Setting switch	Sets the switching of the I/O range, valid / invalid of the input filter, and resolution.
Current and voltage switch	Switches current and voltage depending on the range of a setting switch.

Front view of LED	Indicating contents
 	OK: Light is on when the module is normal. 0 to 7: Light is off when normal. [EH-AXH8M] LED corresponding to the channel flashes if the input becomes maximum 2mA when the range is 4 to 22 mA. (when selecting 0.002 mA resolution.) [EH-AYH8M] LED corresponding to the channel flashes if the data outside the output range is set.

(1) EH-AXH8M

Specification		EH-AXH8M
Current range		0 to 22 mA / 4 to 22 mA
Voltage range		0 to 10 V DC / -10 to 10 V DC
Number of channels	Current	8 channels (can switch current / voltage in 4-ch unit)
	Voltage	
Resolution	Current	0.002 mA or 1 / 16,384 (14 bits)
	Voltage	1 mV or 1 / 16,384 (14 bits)
Conversion time		8.9 ms / 8 channels
Overall accuracy	Current	Max. ±0.8 % (of full-scale value)
	Voltage	Max. ±0.5 % (of full-scale value)
Linear error		Max. ±0.1 % (of full-scale value)
Input filter	Valid	Approx. 90 ms (90 % arriving time after the step input)
	Invalid	Max. 18 ms (90 % arriving time after the step input)
Input impedance	Current	249 Ω
	Voltage	Differential 200 kΩ
Insulation system	Channel and Internal circuit	Photo-coupler insulation
	Between channels	No insulation
External connection		Removable type screw terminal block (M3)
External power supply		24 V DC (+20 %, -15 %) Approx. 40 mA (Approx. 300 mA at power ON)
External wiring		2-core shield cable (Max. 20 m)
Internal current consumption		Approx. 70 mA

Terminal configuration	No.	Signal name	Diagram of Internal circuit
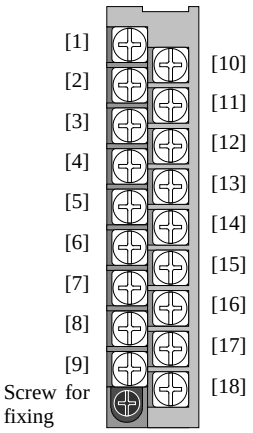	[1]	0 +	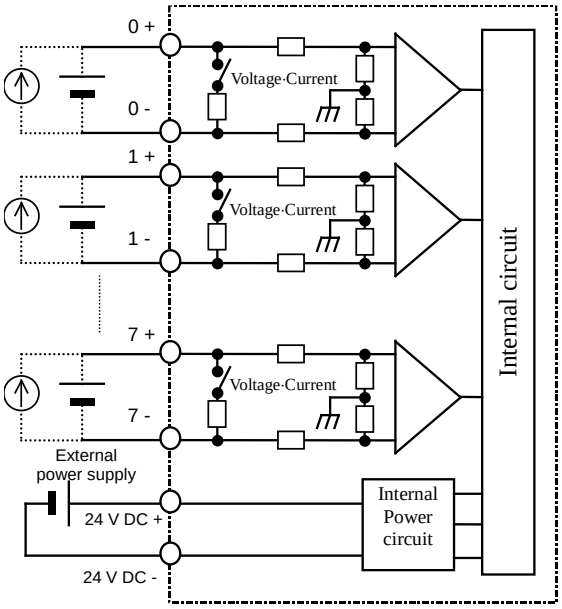
	[2]	1 +	
	[3]	2 +	
	[4]	3 +	
	[5]	4 +	
	[6]	5 +	
	[7]	6 +	
	[8]	7 +	
	[9]	24 V DC+	
	[10]	0 -	
	[11]	1 -	
	[12]	2 -	
	[13]	3 -	
	[14]	4 -	
	[15]	5 -	
	[16]	6 -	
	[17]	7 -	
	[18]	24 V DC-	

Setting switch			
Switch No.	Setup		Function
1, 2	1	2	0 to 3 channel input range switching
	OFF	OFF	0 to 10 V DC
	ON	OFF	-10 to 10 V DC
	OFF	ON	0 to 22 mA
	ON	ON	4 to 22 mA
3, 4	3	4	4 to 7 channel input range switching
	OFF	OFF	0 to 10 V DC
	ON	OFF	-10 to 10 V DC
	OFF	ON	0 to 22 mA
	ON	ON	4 to 22 mA
5	5		Input filter
	OFF		Valid
	ON		Invalid
6	6		Resolution switching
	OFF		1 / 16,384 (14 bits)
	ON		1 mV to 0.002 mA
7	7		(System mode)
	OFF		Always OFF (Do not turn ON)
8	8		(System mode)
	OFF		Always OFF (Do not turn ON)

Current and Voltage switch			
Switch No.	Setup		Function
1 to 8	1 to 4	5 to 8	Switching of current and voltage
	OFF	OFF	0 to 7 channel voltage input
	ON	OFF	0 to 3 channel current input 4 to 7 channel voltage input
	OFF	ON	0 to 3 channel voltage input 4 to 7 channel current input
	ON	ON	0 to 7 channel current input

Support to analog data and digital data

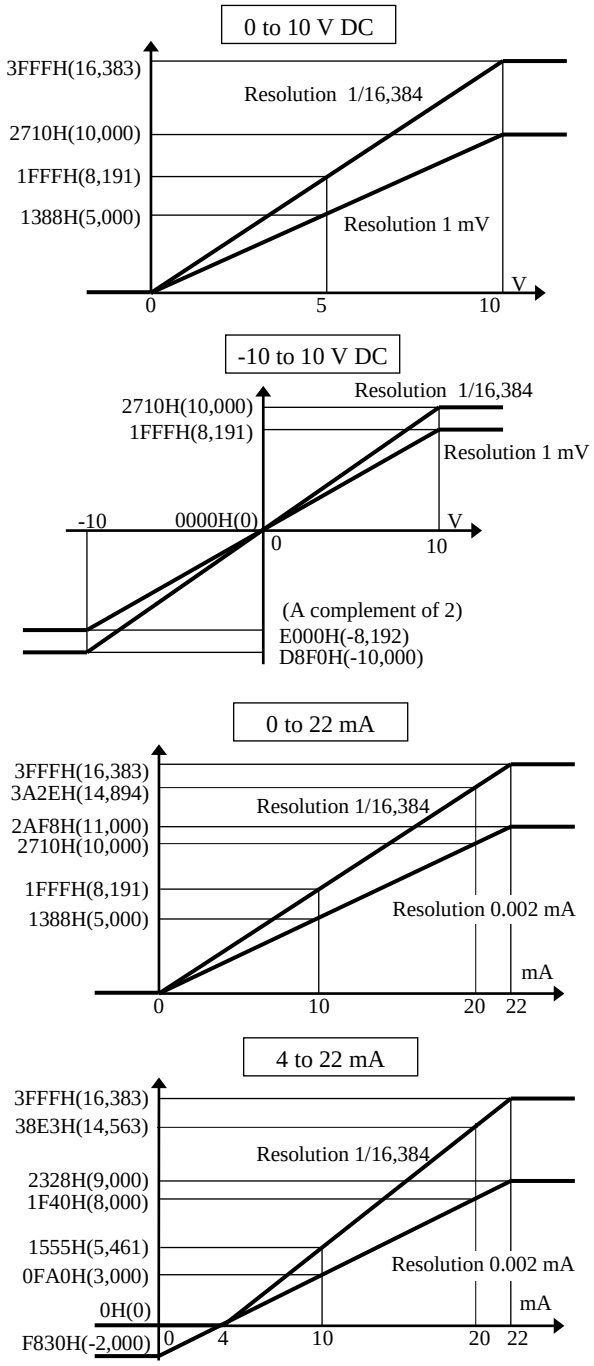

[Setups shown in the white font on black background are initial factory setting:]

* In this module, be sure to perform the above setup before use. Further, be sure to turn off the power in setting up. Otherwise, the setups are invalid. And when the input range is switched with the function selectable switch, be sure to set the current / voltage switch to the corresponding range accordingly.

(2) EH-AYH8M

Specification		EH-AYH8M
Current range		0 to 22 mA / 4 to 22 mA
Voltage range		0 to 10 V DC
Number of channels	Current	8 channels (can switch current and voltage in 4-ch unit)
	Voltage	
Resolution	Current	0.002 mA or 1 / 16,384 (14 bits)
	Voltage	1 mV or 1 / 16,384 (14 bits)
Conversion time		8.9 ms / 8 channels
Overall accuracy	Current	Max. ±0.8 % (of full-scale value)
	Voltage	Max. ±0.8 % (of full-scale value)
Linear error		Max. ±0.2 % (of full-scale value) (range from 0 to 10 V and from 0.05 to 22 mA)
Output filter	Valid	Approx. 200 ms or less (90 % arriving time after setting)
	Invalid	Approx. 18 ms or less (90 % arriving time after setting)
Output impedance	Current	Max. 400 Ω
	Voltage	Max. 10 kΩ
Insulation system	Channel and Internal circuit	Photo-coupler insulation
	Between channels	No insulation
External connection		Removable type screw terminal block (M3)
External power supply		24 V DC (+20 %, -15 %) Approx. 150 mA (Approx. 400 mA at power ON)
External wiring		2-core shield cable (Max. 20 m)
Internal current consumption		Approx. 70 mA

Terminal configuration	No.	Signal name	Diagram of Internal circuit
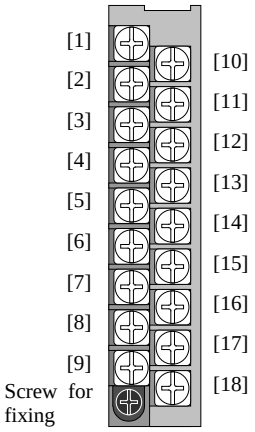	[1]	0 +	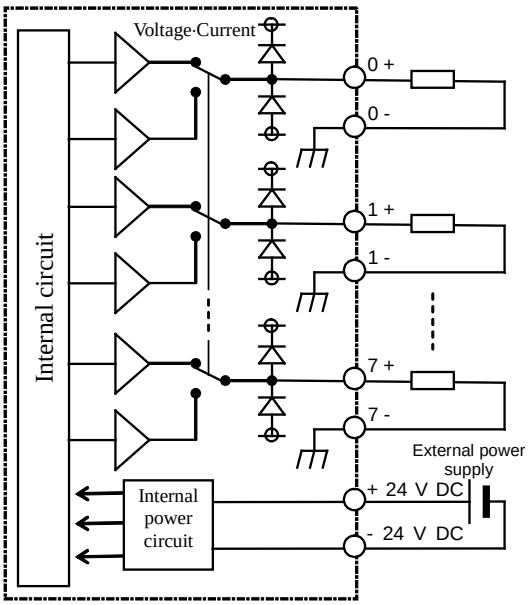
	[2]	1 +	
	[3]	2 +	
	[4]	3 +	
	[5]	4 +	
	[6]	5 +	
	[7]	6 +	
	[8]	7 +	
	[9]	24 V DC+	
	[10]	0 -	
	[11]	1 -	
	[12]	2 -	
	[13]	3 -	
	[14]	4 -	
	[15]	5 -	
	[16]	6 -	
	[17]	7 -	
	[18]	24 V DC-	

Setting switch

No.	Setup		Function
1, 2	1	2	0 to 3 channel output range switching
	OFF	OFF	0 to 10 V DC
	ON	OFF	
	OFF	ON	0 to 22 mA
	ON	ON	4 to 22 mA
3, 4	3	4	4 to 7 channel output range switching
	OFF	OFF	0 to 10 V DC
	ON	OFF	
	OFF	ON	0 to 22 mA
	ON	ON	4 to 22 mA
5	5		Output filter
	OFF		Invalid
	ON		Valid
6	6		Resolution switching
	OFF		1 / 16,384 (14 bits)
	ON		1 mV or 0.002 mA
7	7		(System mode)
	OFF		Always OFF (Do not turn ON)
8	8		(System mode)
	OFF		Always OFF (Do not turn ON)

Current and voltage switch

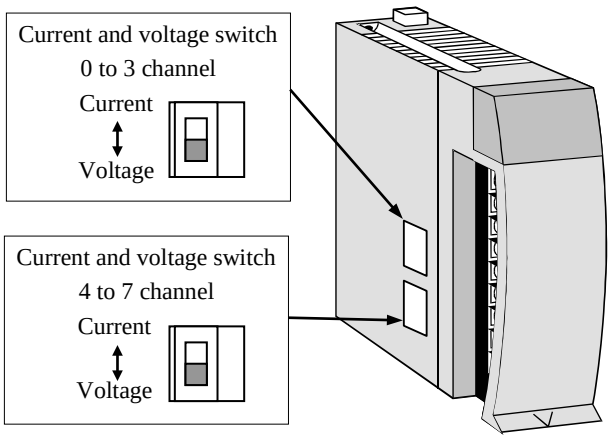

Support to analog data and digital data

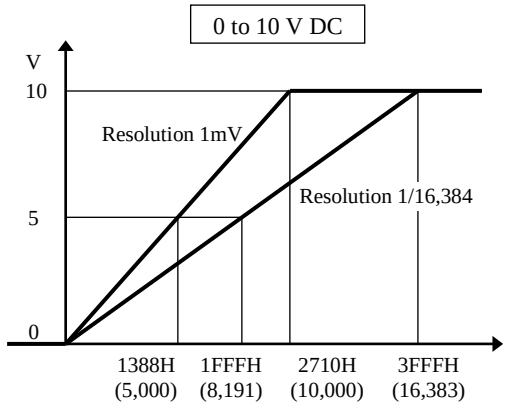

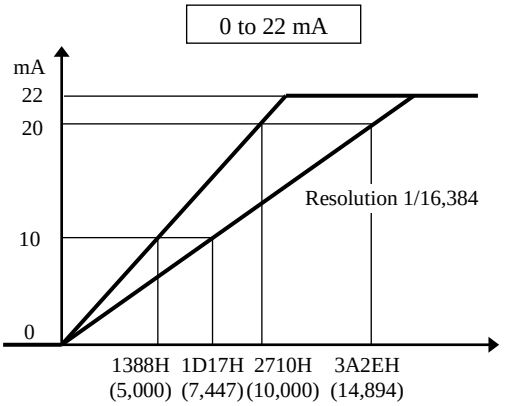

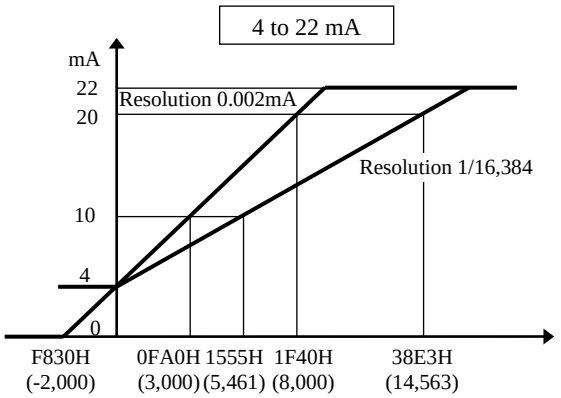

Reference) The images is as follows when the output filter is valid.

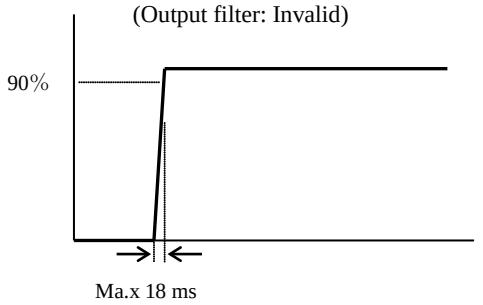

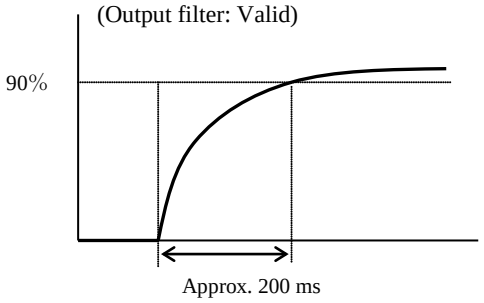

[Setups shown in the white font on black background are initial factory setting:]

* In this module, be sure to perform the above setups before use. Further, be sure to turn of the power in setting up. Otherwise, the setups are invalid. And when the input range is switched with the function selectable switch, be sure to set the current / voltage switch to the corresponding range accordingly.

7.3 Isolated Analog I/O Module

Name and function of each part	Type (Weight)	EH-AXG5M (Approx. 0.15 kg (0.34 lb))
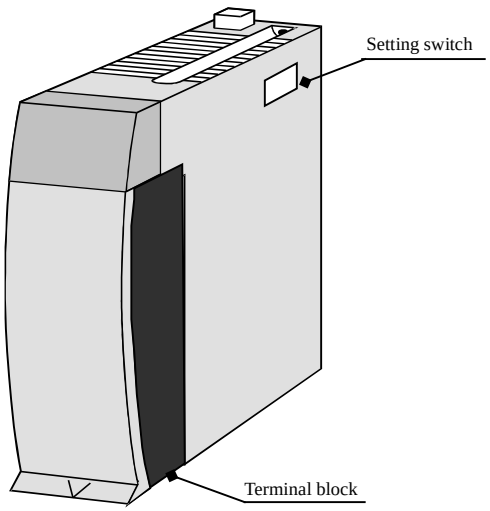		EH-AYG4M (Approx. 0.15 kg (0.34 lb))
	Dimensions (mm (in.))	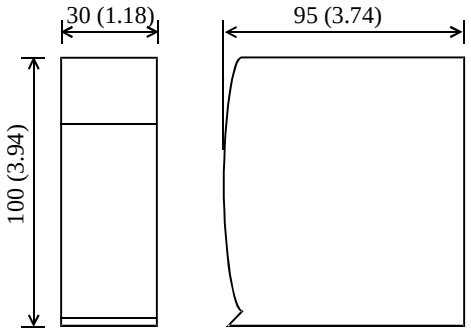

Name	Description
Terminal block	This is a terminal block for connecting the I/O signals. The terminal block is removable. Screws for the terminal block are M3 screws. Use a crimp terminal fitting to the screw diameter. The maximum thickness of cable is 0.75 mm^2. (Use a 0.5 mm^2 cable when attaching two crimp terminals to the same terminal.) The recommended crimp terminal is shown below. 6 (0.24) (Recommended) 6 (0.24) Take great care on handling the terminal because it may fall off if the screw is loose. Unit: mm (in.)
Setting switch	Sets the switching of the I/O range, valid / invalid of the input filter, and resolution.

Front view of LED	Indicating contents
EH-AXG5M 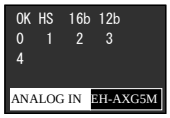	OK: Light is on when the module is normal. HS : Light up when this module is high speed conversion mode. Light is turned off when this module is high accuracy mode. 16b : Light up when this module is high resolution mode. 12b : Light up when this module is 12 bit resolution mode. 0 to 7: Light is off when normal. LED corresponding to the channel flashes if the input becomes maximum 2 mA when the range is 4 to 22 mA.(when selecting high resolution mode.)
EH-AYG4M 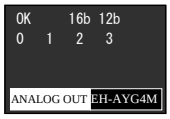	OK: Light is on when the module is normal. 16b : Light up when this module is high resolution mode. 12b : Light up when this module is 12 bit resolution mode. 0 to 3 : In case of current range, LED of each channel is blinking when wire breaking (when current mode) or out of data range was detected.

(1) EH-AXG5M

Specification		EH-AXG5M
Current range		0 to 22 mA / 4 to 22 mA
Voltage range		0 to 10 V DC / -10 to 10 V DC
Number of channels	Current	5 channels (can switch current / voltage)
	Voltage	
Resolution	Current	0 to 64,000, -7,111 to 32,000 or 0 to 4,095 (20 mA)
	Voltage	0 to 64,000 or 0 to 4,095
Conversion time		8 ms or 0.25 ms / 5 channels
Overall accuracy*1,*2	At 25 °C	Max. -0.05 to +0.05 % (of full-scale value)
	Temperature coefficient	Max. -80 to +80 ppm / °C (of full-scale value)
Absolute maximum ratings		Voltage: -15 to 15 V Current :30 mA*3
Input filter		1 kHz
Input impedance	Current	249 Ω
	Voltage	Differential 200 kΩ
Insulation system	Channel and Internal circuit	Transformer (1,000 V AC, 1 minutes)
	Between channels	Transformer (1,000 V DC, 1 minutes)
External connection		Removable type screw terminal block (M3)
External power supply		None
External wiring		2-core shield cable (Max. 20 m)
Internal current consumption (5 V DC)		Approx. 300 mA

*1 Example) Accuracy at 40 °C is calculated as follows,
0.05 % (accuracy at 25 °C) + 0.008 %/ °C (Temperature coefficient) * 15 °C (difference form 25 °C) = 0.17 %
*2 The accuracy indicates the value after 15 minutes from the power-up. The value may become a lightly higher immediately after the power-up.
*3 It is the momentary current value that does not destroy the resistance in the module.

Terminal configuration	No.	Signal name	Diagram of Internal circuit
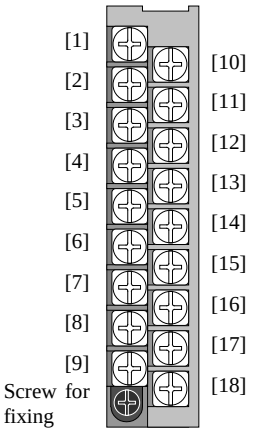	[1]	(NC)	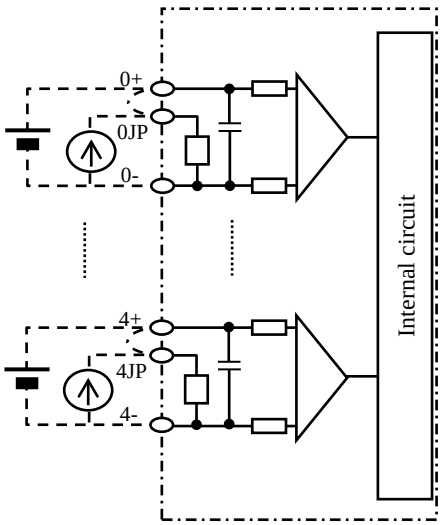
	[2]	(NC)	
	[3]	0 -	
	[4]	1 +	
	[5]	1JP	
	[6]	2 -	
	[7]	3 +	
	[8]	3JP	
	[9]	4 -	
	[10]	(NC)	
	[11]	0 +	
	[12]	0JP	
	[13]	1 -	
	[14]	2 +	
	[15]	2JP	
	[16]	3 -	
	[17]	4 +	
	[18]	4JP	

Setting switch			
Switch No.	Setup		Function
1, 2	1	2	Input range switching
	OFF	OFF	0 to 10 V DC
	ON	OFF	-10 to 10 V DC
	OFF	ON	0 to 22 mA
	ON	ON	4 to 22 mA
3, 4	3	4	Moving Average data number
	OFF	OFF	Not use moving Average
	ON	OFF	4
	OFF	ON	16
	ON	ON	64
5	5		Resolution
	OFF		High resolution mode (equally 16 bit)
	ON		12 bit mode
6	6		Conversion time
	OFF		High accuracy, 8 ms (whole channel)
	ON		High speed,0.25 ms (whole channel)
7	7		For system
	OFF		Always OFF (should not turn ON)
8	8		For system
	OFF		Always OFF (should not turn ON)

[Setups shown in the white font on black background are initial factory setting:]

* In this module, be sure to perform the above setup before use. Further, be sure to turn off the power in setting up. Otherwise, the setups are invalid.

Support to analog data and digital data

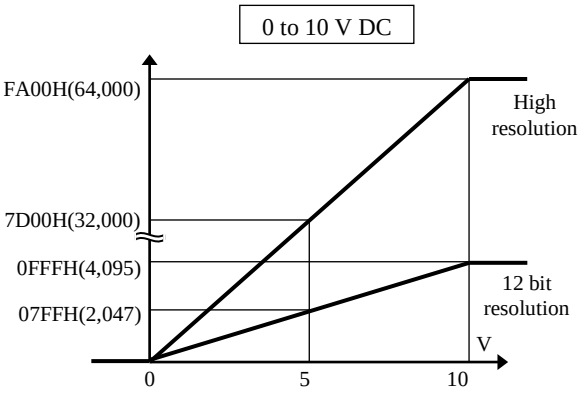

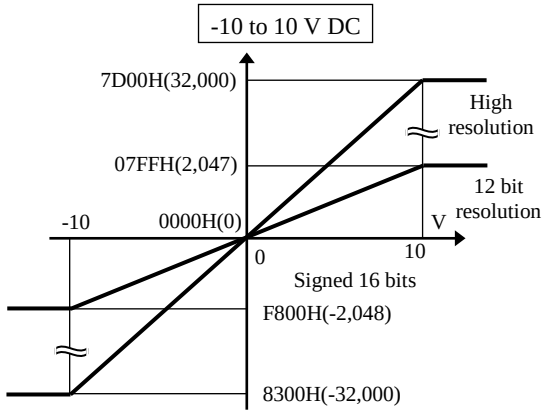

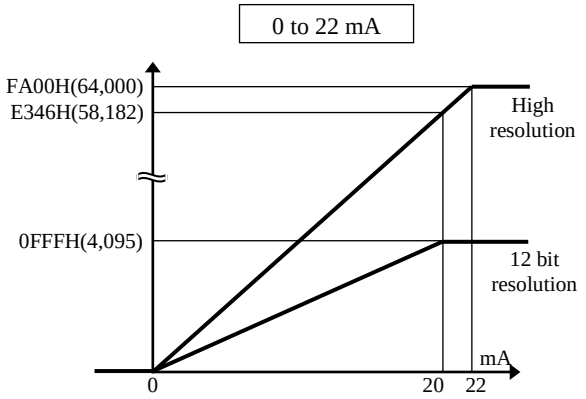

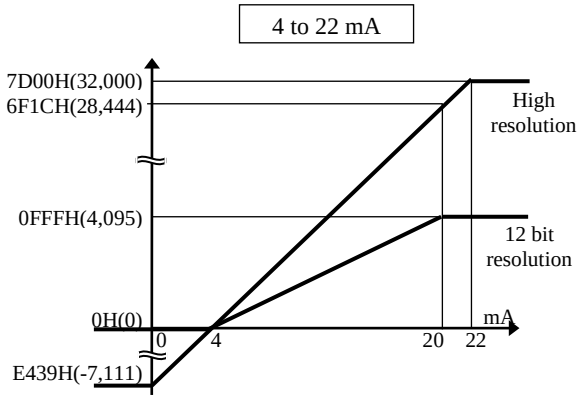

(2) EH-AYG4M

Specification		EH-AYG4M
Current range		0 to 22 mA / 4 to 22 mA
Voltage range		0 to 10 V DC / -10 to 10 V DC
Number of channels	Current	4 channels (can switch current / voltage)
	Voltage	
Resolution	Current	0 to 64,000, -7,111 to 32,000 or 0 to 4,095 (20 mA)
	Voltage	0 to 64,000 or 0 to 4,095
Conversion time		0.25 ms / 4 channels
Overall accuracy*1,*2	At 25 °C	Max. -0.1 to +0.1 % (of full-scale value)
	Temperature coefficient	Max. -80 to +80 ppm / °C (of full-scale value)
Absolute maximum ratings		Voltage: -15 to 15 V Current :24 mA
Output impedance	Current	More than 1 k Ω
	Voltage	Less than 600 Ω
Insulation system	Channel and Internal circuit	Transformer (1,000 V AC, 1 minutes)
	Between channels	Transformer (1,000 V DC, 1 minutes)
External connection		Removable type screw terminal block (M3)
External power supply		None
External wiring		2-core shield cable (Max. 20 m)
Internal current consumption (5 V DC) *3		Max. 730 mA

*1 Example) Accuracy at 40 °C is calculated as follows,
0.1 % (accuracy at 25 °C) + 0.008 %/ °C (Temperature coefficient) * 15 °C (difference form 25 °C) = 0.22 %

*2 The accuracy indicates the value after 15 minutes from the power-up. The value may become a lightly higher immediately after the power-up.

*3 480 mA (All channel output 10 V voltage output with 10 kΩ impedance)
600 mA (All channel output 10 V voltage output with 1 kΩ impedance) or (All channel output 11 mA current output)
730 mA (All channel output 22 mA current output)

Terminal configuration	No.	Signal name	Diagram of Internal circuit
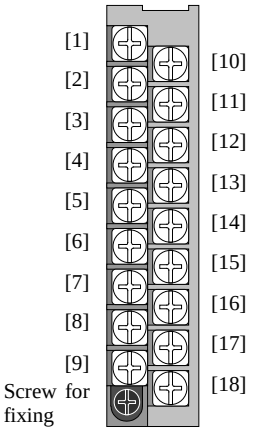	[1]	(NC)	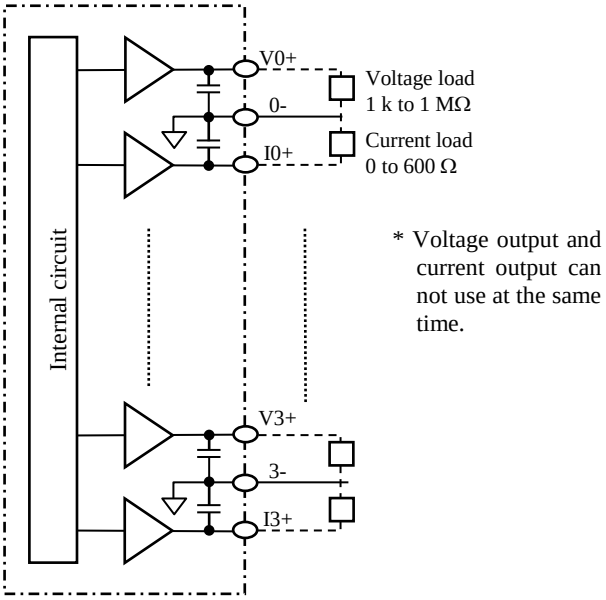
	[2]	(NC)	
	[3]	0 -	
	[4]	(NC)	
	[5]	1 -	
	[6]	(NC)	
	[7]	2 -	
	[8]	(NC)	
	[9]	3 -	
	[10]	(NC)	
	[11]	V0 +	
	[12]	I0 +	
	[13]	V1 +	
	[14]	I1 +	
	[15]	V2 +	
	[16]	I2 +	
	[17]	V3 +	
	[18]	I3 +	

Setting switch

Switch No.	Setup		Function
1, 2	1	2	Output range switching
	OFF	OFF	0 to 10 V DC
	ON	OFF	-10 to 10 V DC
	OFF	ON	0 to 22 mA
	ON	ON	4 to 22 mA
3, 4	3	4	Slew Rate
	OFF	OFF	OFF
	ON	OFF	0.1 s
	OFF	ON	1 s
	ON	ON	10 s
5	5		Resolution
	OFF		High resolution mode (equally 16 bit)
	ON		12 bit mode
6	OFF		For system
	ON		Always OFF (should not turn ON)
7	7		For system
	OFF		Always OFF (should not turn ON)
8	8		For system
	OFF		Always OFF (should not turn ON)

Slew Rate function

Slew Rate is a function to change the time of signal change ratio. It defines the time for the full scale value. The image is as follows.

Example1)
In the case that the signal setting changes 0 to 5V
[Mode setting]
Output range:0 to 10 V DC
Slew Rate :1 s

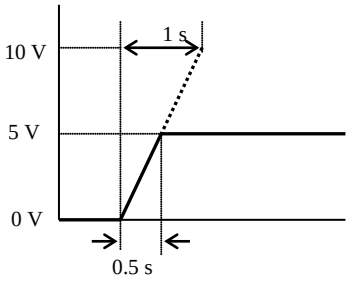

Example2)
In the case that the signal setting changes 4 to 22 mA, it is changed to 13 mA before completion of the setting.
[Mode setting]
Output range : 4 to 22 mA
Slew Rate : 10 s

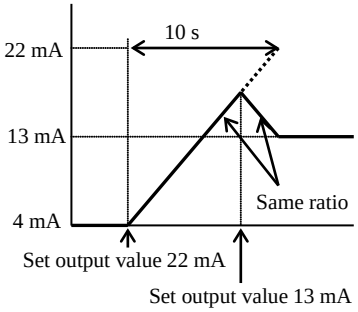

Support to analog data and digital data

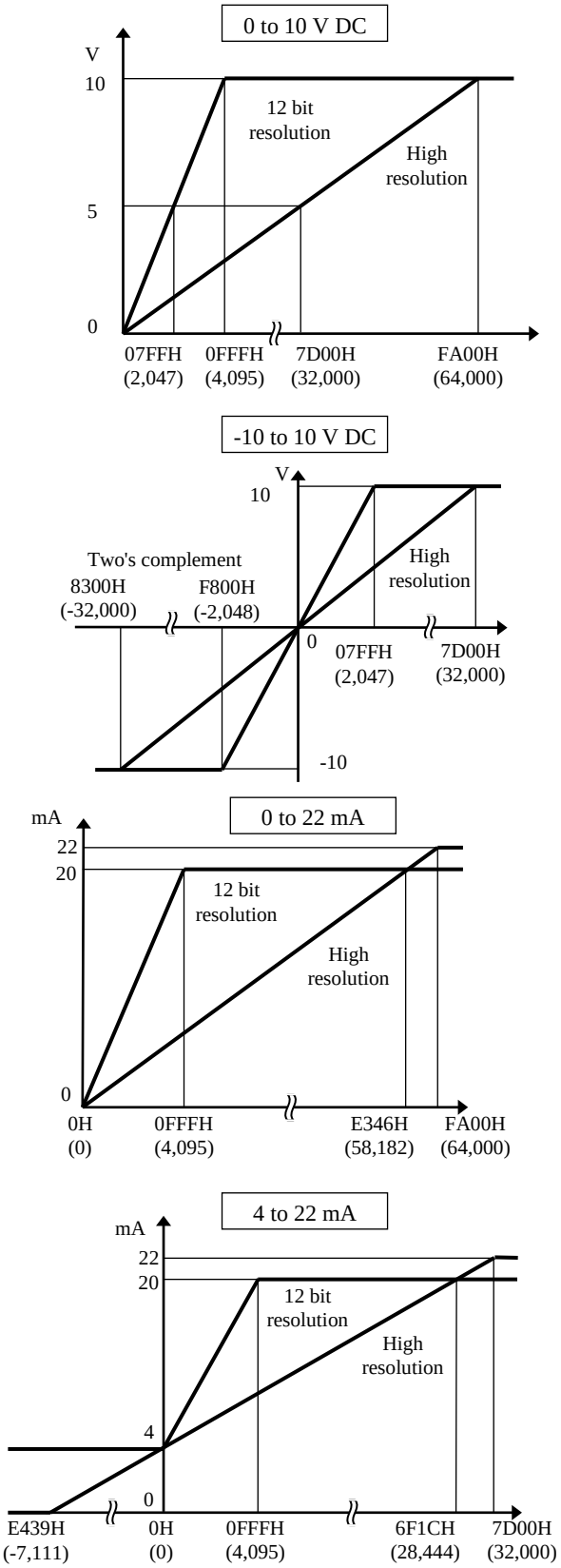

[Setups shown in the white font on black background are initial factory setting:]

* In this module, be sure to perform the above setup before use. Further, be sure to turn off the power in setting up. Otherwise, the setups are invalid.

7.4 Resistance Temperature Detector Input Module

(1) Resistance temperature detector input

Name and function of each part	Type (Weight)	EH-PT4 (Approx. 0.18 kg (0.40 lb))
	Dimensions (mm (in.))	

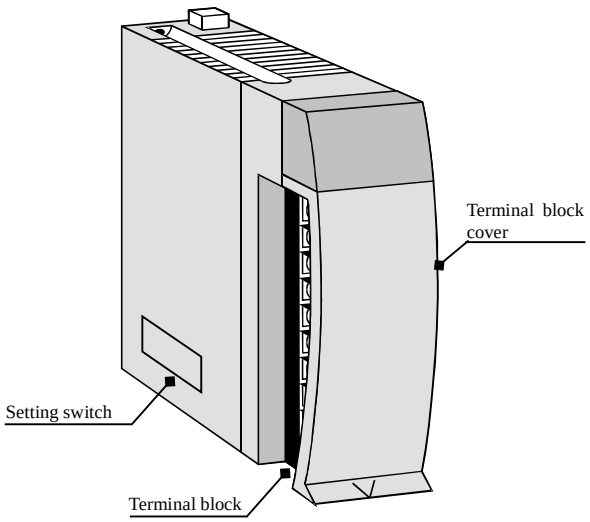

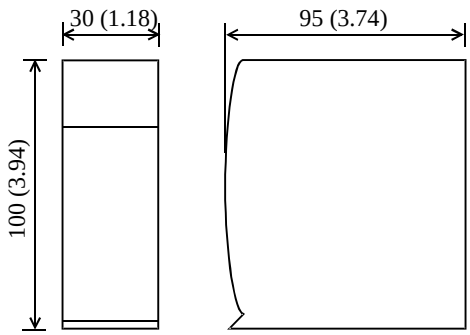

Name	Description
Terminal block	This is a terminal block for connecting the I/O signals. The terminal block is removable. Screws for the terminal block are M3 screws. Use a crimp terminal fitting to the screw diameter. The maximum thickness of cable is 0.75 mm^2. (Use a 0.5 mm^2 cable when attaching two crimp terminals to the same terminal.) The recommended crimp terminal is shown below. (Recommended) Take great care on handling the terminal because it may fall off if the screw is loose. Unit: mm (in.)
Terminal block cover	This is a cover for attaching to the terminal block.
Setting switch	Selects a resistance temperature detector to be used and a measuring temperature range.

Resistance temperature detector Measuring temperature range	Switch setup							
	1	2	3	4	5	6	7	8
Pt100 -20 to 40 °C	ON	ON	OFF	OFF	ON	OFF	OFF	OFF
Pt100 -50 to 400 °C	OFF	OFF	ON	OFF	OFF	ON	OFF	OFF
Pt1000 -50 to 400 °C	OFF	OFF	OFF	ON	OFF	OFF	ON	OFF

Note that the temperature data are indefinite in the setup except the above.

Specification		EH-PT4
Applicable resistance thermometer		Platinum resistance thermometer Pt100 (JIS C 1604-1989) / Pt1000
Temperature conversion data		Signed 15 bits
Accuracy*1	-20 to 40 °C (Pt100)	±0.1 °C @25 °C (±0.5 °C @0 to 55 °C)
	-50 to 400 °C (Pt100)	±0.6 °C @25 °C (±3 °C @0 to 55 °C)
	-50 to 400 °C (Pt1000)	±0.8 °C @25 °C (±6 °C @0 to 55 °C)
Measuring temperature range		-20 to 40 °C / -50 to 400 °C (2 mA constant current system)
Input channel		4 channels
Conversion time		Approx. 1s / 4 channels
Insulation system	Channel and Internal circuit	Photo-coupler insulation
	Between channels	No insulation
External connection		Removable type screw terminal block (M3)
External power supply		24 V DC
External wiring		Shield cable
Unused terminal processing		Temperature conversion data is H7FFF
External wiring resistance		Total resistance of 4 channels 400 Ω at the maximum
Additional function		Linearization
Error detection*2		Temperature conversion data is H7FFF at Max. -51 °C , or Min. 410 °C
Wire breakage processing*2		Temperature conversion data is H7FFF
Internal current consumption		Approx. 160 mA

*1 The accuracy indicates the value after 10 minutes from the power-up. The value may become a lightly higher immediately after the power-up. Also, check the resistance thermometer in advance because there is error in the resistance thermometer.
*2 Indicates the current terminal wiring in open state. When an open error occurs in the voltage terminal wiring, the data is indefinite.

Terminal configuration	No.	Signal name	Diagram of Internal circuit
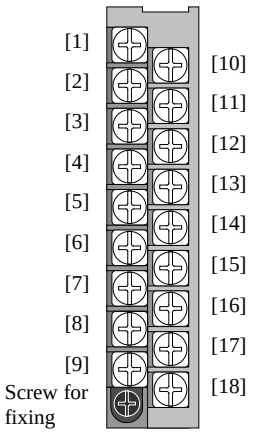	[1]	b0	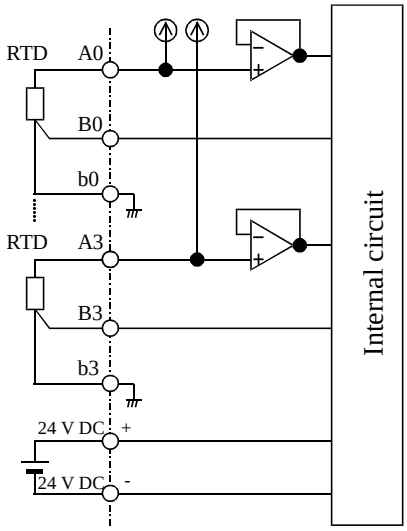
	[2]	B0	
	[3]	b1	
	[4]	B1	
	[5]	b2	
	[6]	B2	
	[7]	b3	
	[8]	B3	
	[9]	24 V DC+	
	[10]	A0	
	[11]	N.C.	
	[12]	A1	
	[13]	N.C.	
	[14]	A2	
	[15]	N.C.	
	[16]	A3	
	[17]	N.C.	
	[18]	24 V DC-	

(2) 6 ch.(3-wire) / 8 ch.(2-wire) resistance temperature detector input

Name and function of each part	Model name (Weight)	EH-RTD8(Approx. 0.15 kg (0.33 lb))
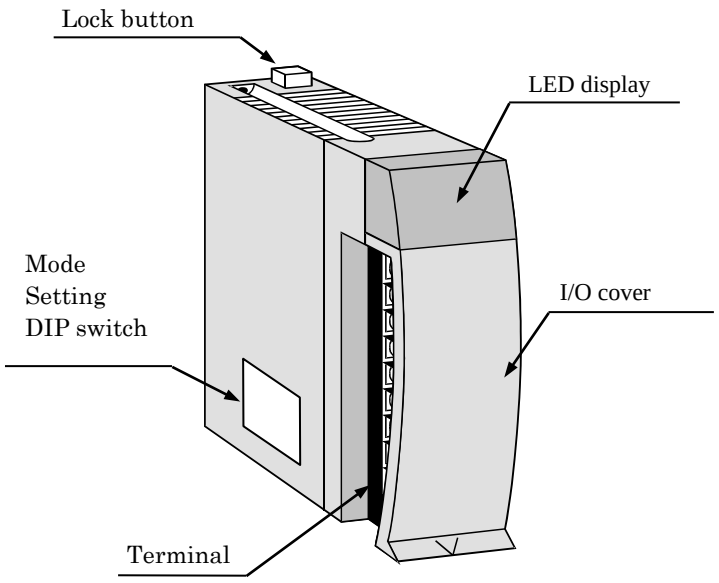	Dimensions (mm (in.))	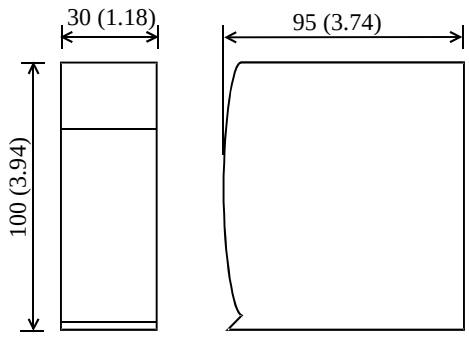

Name	Function
Lock button	Press this button to dismount. Module can be fixed firmly by a screw of M4 × 10 mm (0.39 in.).
I/O cover	This is the cover attached to the terminal block area.
Terminal	The screws for the terminal block are M3 screws. Use a crimp terminal that fits the screw diameter. The maximum thickness of the cable should be only up to 0.75 mm^2. (Use 0.5 mm^2 cable when two crimp terminals are attached to the same terminal.) The recommended crimp terminal is indicated below. 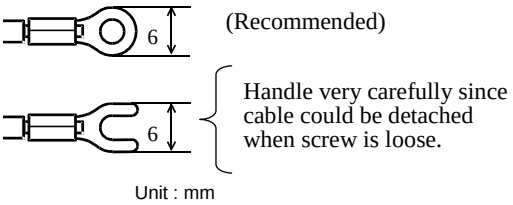
LED display	The status of module and input signal are indicated in this LED. OK : Green : Normal status 2W : Green : 2-wire mode Off : 3-wire mode AMB : Green : -40 to 60 °C mode Off : -200 to 850 °C mode HS : Green : High speed conversion time (0.5 s) Off : Normal conversion time (1.6 s) 0 to 7 : Blinking red : Open-wire or out-of-range is detected in corresponding channel number (0.5 s cycle)

Name	Function
Mode setting DIP switch	These switches are to set wiring type, temperature range, input filter, conversion time, temperature unit, EH-PT4 compatible mode and sensor type.

No.	Setting	Function
SW1-1	1	Wiring type
	OFF	3-wire
	ON	2-wire
SW1-2	2	Temperature range
	OFF	-200 to 850 °C, °F conversion: -328 to 1,562 °F, EH-PT4 compatible:-60 to 410°C
	ON	-40 to 60°C, °F conversion: -328 to 1,562 °F , EH-PT4 compatible: -25 to 45 °C
SW1-3	3	Input filter
	OFF	None
	ON	16 times moving average
SW1-4	4	Conversion time
	OFF	1.6 s
	ON	0.5 s
SW1-5	5	Temperature unit
	OFF	°C
	ON	°F
SW1-6	6	EH-PT4 compatible mode
	OFF	Disable
	ON	Enable
SW1-7	7	For system use
	OFF	Set always OFF
SW1-8	8	For system use
	OFF	Set always OFF
SW2	9	Sensor type
	OFF	Pt1000
	ON	Pt100

Item		Specification		
Type		EH-RTD8		
Supported RTD type		PT100 / PT1000 (3-wire or 2-wire)		
Number of channel Selectable by the DIP switch		6 (3-wire) or 8 (2-wire)		
Temperature range Selectable by the DIP switch		-200 to 850 °C or -40 to 60 °C		
Resolution Selectable by the DIP switch		°C conversion	°F conversion	PT4 compatible
		-200 to 850°C : 0.1 °C	-328 to 1562 °F : 0.1 °F	-60 to 410 °C : 15 bits
		-40 to 60°C : 0.02 °C	-	-25 to 45 °C : 15 bits
Conversion time Selectable by the DIP switch		1.6 s (all channels) or 0.5 s (all channels)		
Accuracy *1	Standard accuracy (25 °C)	Max. ±0.5 °C (measured temperature under 380 °C) Max. ±0.8 °C (measured temperature over 380 °C)		
	Temperature coefficient	±0.01% / °C (FS)*2 (±0.1°C / °C)		
Measurement current		0.18 mA		
Diagnostic error (Wire breaking detection)	LED	LED blinking at error channel		
	Conversion value	H7FFF		
Input filter Selectable by the DIP switch		None or moving average 16 times		
Warm-up time *3		1 minute		
Isolation	Channel to internal circuit	Photo coupler		
	Between channels	Not isolated		
External connector		Removable terminal (M3)		
Internal current consumption (5 V DC)		Max. 300 mA		
External power supply		None		
Wiring		Twisted shield cable, wiring resistance Max. 5 Ω (Max. 100m of 22 AWG)		

*1 Example : Measuring under 380 °C in ambient temperature 35 °C.(under noise-free environment)
0.5 °C (standard accuracy) + 0.1 °C / °C (temperature coefficient) × 10 (difference to 25 °C) = ±1.5 °C
*2 Full scale is -200 to 850 °C.
*3 It is the time for data to be stable after power on.

Terminal layout	No.	Signal name		Internal circuit
		2-wire	3-wire	
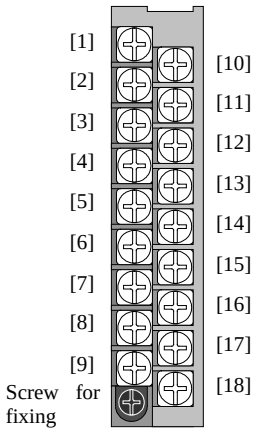	[1]	A0	A0	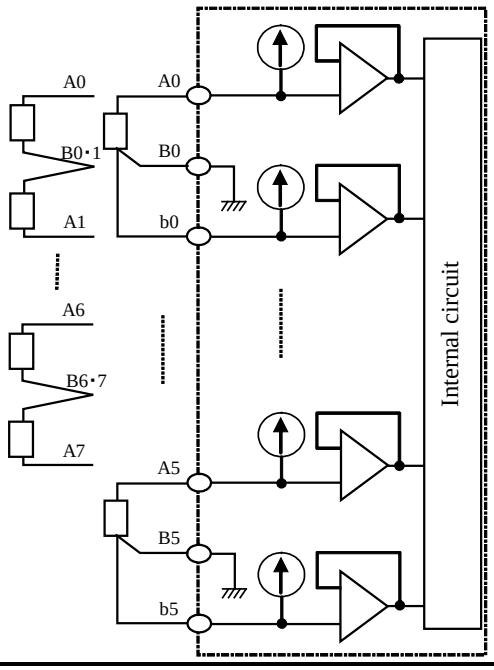
	[2]	A1	b0	
	[3]	B2・B3	B1	
	[4]	A4	A2	
	[5]	A5	b2	
	[6]	B6・B7	B3	
	[7]	NC	A4	
	[8]	NC	b4	
	[9]	NC	B5	
	[10]	B0・B1	B0	
	[11]	A2	A1	
	[12]	A3	b1	
	[13]	B4・B5	B2	
	[14]	A6	A3	
	[15]	A7	b3	
	[16]	NC	B4	
	[17]	NC	A5	
	[18]	NC	b5	

7.5 Thermocouple Input Module

Name and function of each part	Type (Weight)	EH-TC8 (Approx. 0.16 kg (0.35 lb))
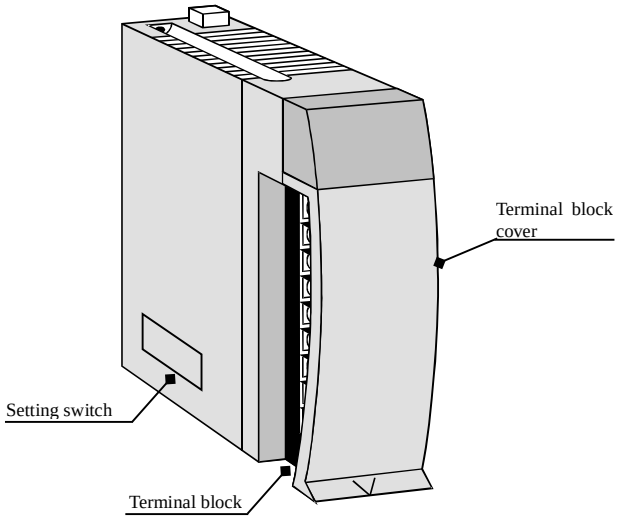	Dimensions (mm (in.))	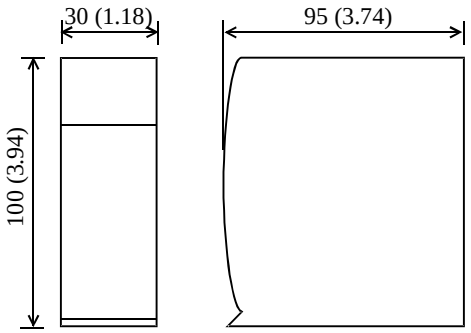

Name	Description
Terminal block	This is a terminal block for connecting the I/O signals. The terminal block is removable. Screws for the terminal block are M3 screws. Use a crimp terminal fitting to the screw diameter. The maximum thickness of cable is 0.75 mm^2. (Use 0.5 mm^2 cable when attaching two crimp terminals to the same terminal.) The recommended crimp terminal is shown below. 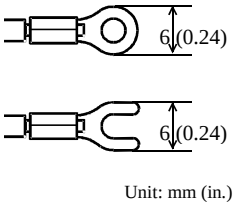 (Recommended) Take great care on handling the terminal because it may fall off if the screw is loose. Unit: mm (in.)
Terminal block cover	This is a cover for attaching to the terminal block.
Select switch	Sets the switching of the temperature range, Celsius / Fahrenheit, etc.

Front view of LED	Indicating contents
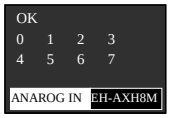 	OK: Light is on when the module is normal. 0 to 7: Light is off when normal LED corresponding to the channel which detected the error flashes.

Specification		EH-TC8	
Applicable thermocouple (switchable by a switch)		Conforms to JIS C 1602-1995 Type K, E, J, T, B, R, S, N	
Temperature conversion data		Signed 15 bits	
Measuring temperature range and accuracy*1	Type	Accuracy guaranteed range	Input range
	K	-200 to 1,200 °C 0.4 % (FS)	-270 to 1,370 °C
	E	-200 to 900 °C 0.3 % (FS)	-270 to 1,000 °C
	J	-40 to 750 °C 0.3 % (FS)	-270 to 1,200 °C
	T	-200 to 350 °C 0.8 % (FS)	-270 to 400 °C
	B	600 to 1,700 °C 1.0 % (FS)	0 to 1,820 °C
	R	0 to 1,600 °C 1.0 % (FS)	-50 to 1,760 °C
	S	0 to 1,600 °C 1.0 % (FS)	-50 to 1,760 °C
	N	-200 to 1,200 °C 0.4 % (FS)	-270 to 1,300 °C
Cold junction temperature error*2		Max. ±2 °C (Ambient temperature 15 to 35 °C) Max. ±3 °C (Ambient temperature 0 to 55 °C)	
Resolution		0.1 °C / 0.1 °F (K, E, J, T, N) 1.0 °C / 1.0 °F (B, R, S)	
Input channel		8 channels	
Conversion time		108 / 860 ms	
Insulation system	Channel and Internal circuit	Photo-coupler insulation	
	Between channels	No insulation	
External connection		Removable type screw terminal block (M3)	
External power supply		24 V DC ±10% 100 mA at the maximum	
External wiring*3		Shield cable	
Internal current consumption		Approx. 70 mA	
Error detection	Input upper limit value over / Breaking wiring detection	Input data: H7FFF (LED corresponding to a channel which detected error flashes.)	
	Input lower limit value over	Input data: H8000	

*1 The sum of accuracy of each sensor and the cold junction temperature error is the overall accuracy. Also, there is error in the thermocouple.
*2 Error is the value after 10 minutes from the power-up. Error may increase slightly because of a quick change in using ambient temperature.
*3 The external wiring length is possible to 100 m (328 ft.) at the maximum. However, understand in advance that it may change according to the environment used.

Terminal configuration	No.	Signal name	Diagram of Internal circuit
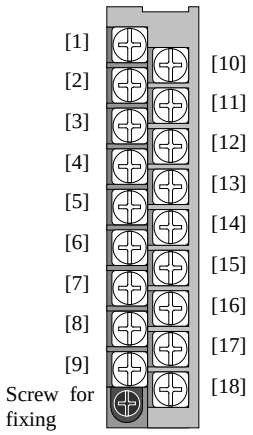	[1]	CH0(+)	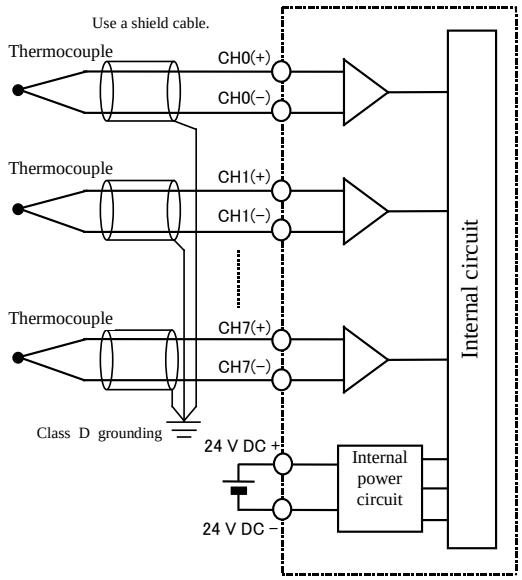
	[2]	CH1(+)	
	[3]	CH2(+)	
	[4]	CH3(+)	
	[5]	CH4(+)	
	[6]	CH5(+)	
	[7]	CH6(+)	
	[8]	CH7(+)	
	[9]	24 V DC+	
	[10]	CH0(-)	
	[11]	CH1(-)	
	[12]	CH2(-)	
	[13]	CH3(-)	
	[14]	CH4(-)	
	[15]	CH5(-)	
	[16]	CH6(-)	
	[17]	CH7(-)	
	[18]	24 V DC-	

Item	Switch setup			Setting contents
Thermocouple sensor switching (Common to all channels)	1	2	3	
	OFF	OFF	OFF	Type K
	ON	OFF	OFF	Type E
	OFF	ON	OFF	Type J
	ON	ON	OFF	Type T
	OFF	OFF	ON	Type B
	ON	OFF	ON	Type R
	OFF	ON	ON	Type S
	ON	ON	ON	Type N
Celsius (°C) / Fahrenheit (°F) switching (Common to all channels)	4			
	OFF			Celsius (°C)
	ON			Fahrenheit (°F)
Data updating interval switching	5			
	OFF			860ms
	ON			108ms
Internal cold junction compensation switching	6			
	OFF			Cold junction compensation; Valid
	ON			Cold junction compensation; Invalid
(System mode)	7			
	OFF			Always OFF (Do not turn ON.)
	8			
	OFF			Always OFF (Do not turn ON.)

[Setups shown in the white font on black background are initial factory setting:]

* In this module, be sure to perform the above setups. And, be sure to turn off the power in setting up. Otherwise, the setups are invalid.

Reference

If the internal cold junction compensation is invalidated and a highly accurate ice-bus is installed outside, the temperature can be measured accurately on higher level.

MEMO

Chapter 8 Positioning and Counter Module

8.1 Single-axis Positioning Module (Discontinued)

Name and function of each part	Type (Weight)	EH-POS (Approx. 0.17 kg (0.37 lb))
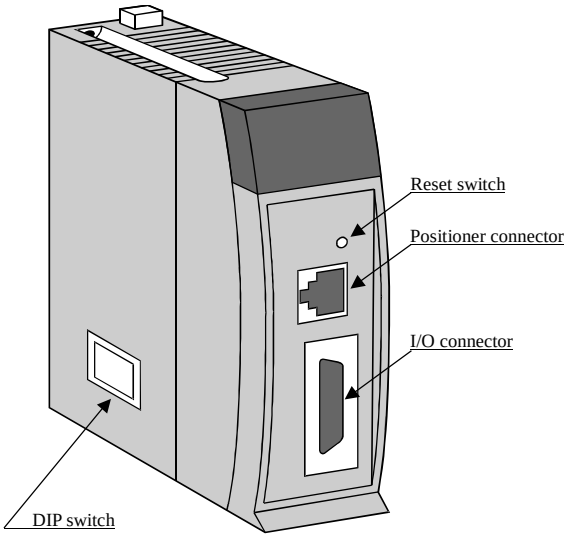	Dimensions (mm (in.))	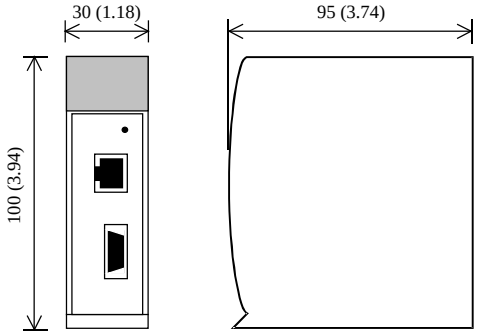

Name	Description
Reset switch	The module is reset if this switch is pressed.
Positioner connector	This is used for connecting the positioner.
I/O connector	This is a connector (20 pins) for the pulse output and the external control input. Applicable connector Manufacturer: Sumitomo 3M Connecting system: 10120-3000VE (Soldering type) Shell: 10320-52F0-008 (or equivalents)
DIP switch	Switches the choice of pulse output method (CW / CCW or CK / Direction switching), output logic (positive / negative logic), and whether external input signal is in or not. Turn off the power and remove the module out of the base to change the setting.

Purpose	Applied switch	Bit 1	Bit 2	Explanation
Choice of pulse output method	Bit 1-2 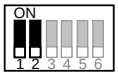	OFF	OFF	Clock pulse / Direction signal output (Positive logic)
		OFF	ON	Clock pulse / Direction signal output (Negative logic)
		ON	OFF	CW / CCW pulse output (Positive logic)
		ON	ON	CW / CCW pulse output (Negative logic)

Purpose	Applied switch		Explanation
Positioning complete external input signal Choice of (COIN) is in or not	Bit 4 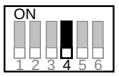	OFF	COIN signal
		ON	No COIN signal
+ Direction overrun external input signal Choice of (+0.RUN) is in or not	Bit 5 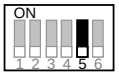	OFF	+0.RUN signal
		ON	No +0.RUN
- Direction overrun external input signal Choice of (-0.RUN) is in or not	Bit 6 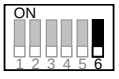	OFF	-0.RUN signal
		ON	No -0.RUN signal

* Always use Bit 3 with OFF

Specifications

Item		Specification
Number of control axes		1 axis
Highest frequency		400 kpulse/s
Positioning data	Capacity	256 points
	Setting procedure	1. Sequence program 2. Positioner (Note, a positioner is optional.)
Positioning	Method	1. Absolute system 2. Absolute system + Increment system 3. Increment system
	Positioning instruction	1. Pulse specifying 2. μm specifying 3. inch specifying 4. degree specifying
	Speed instruction	Automatic, manual, and homing 6.25 pulse/s to 400 kpulse/s μm/s、inch/s、degree/s input function
	Speed stage	10 stages
	Acceleration and deceleration system	Trapezoid acceleration and deceleration S-curve acceleration and deceleration (3-stage acceleration and deceleration)
	Acceleration and deceleration time	1 to 65,535 ms
	Backlash	0 to 255 pulse
	High and low limit setting	+2,147,483,647 to -2,147,483,648 pulse
	Pulse output method	1. Pulse chain (CW / CCW) 2. Clock + direction signal (CK / Direction) (DIP switch No.1 and No.2 set the choice of pulse output system and the switching of each positive and negative logic.)
	Pulse output procedure	1. Open collector output (Photo-coupler insulation) 2. Line driver output (Photo-coupler insulation)
Homing function		1. Free home position 2. Low speed homing 3. High speed homing 1 4. High speed homing 2 5. Absolute value encoder homing
Teaching		Possible
Manual (JOG) operation		Pulse output by manual input signal
Operation when CPU has stopped		Operation is possible via I/O set or using the positioner
Absolute value encoder input		Supports to Σ series / Σ II series by Yasukawa Electric Co. and P series by SANYO electric Co.
Mounting position		Basic base and Expansion base
Number of units to be mounted simultaneously		Unlimited within power supply capacity of the power module

(continued on the following page)

*1 When the CPU is stopped during operation, the motor decelerates and stops.

*2 The maximum travel per one movement is 2,147,483,647 pulses. If the operation is performed exceeding the maximum travel, the motor decelerates and stops at the maximum travel position.

Specifications (continued from the preceding page)

Item			Specification
Output	Pulse chain (CW / CCW) output Clock + Direction signal (CK / Direction) pulse output		1. Open collector output photo-coupler insulation (30 V DC at the maximum, 30 mA resistive load) 2. Line driver output photo-coupler insulation (5 V DC)
	Maximum leak current		Max. 100 μ A
	Maximum voltage drop at ON		0.8 V at the maximum (at output current 30 mA)
Input	Input voltage		10.8 to 30 V DC
	Input impedance		Approx. 2.2 kΩ
	Input current		Approx. 10 mA (24 V DC)
	Operating voltage	Minimum ON voltage	9 V
		Maximum OFF voltage	3.6 V
	Input lag	ON → OFF	Max. 1 ms
		OFF → ON	Max. 1 ms
	Polarity		Only encoder signal input uses the plus common inside the unit, and other inputs do not specify polarity.
	Insulation system		Photo-coupler

A) Specifications of Positioner connector (CN1): conforms to RS-422

Terminal configuration	No.	Signal	Signal name	Diagram of Internal circuit
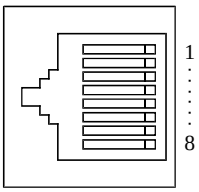	1	Do -	Driver output -	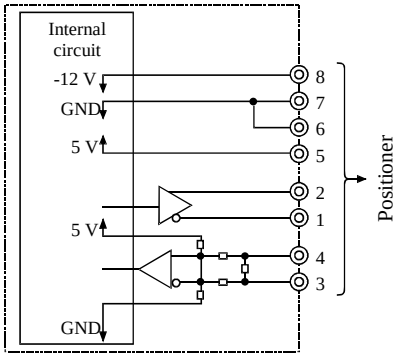
	2	Do +	Driver output +	
	3	Ri -	Receiver input -	
	4	Ri +	Receiver input +	
	5	5 V DC +	+ 5 V	
	6	0 V	GND	
	7	0 V	GND	
	8	12 V DC -	-12 V	

B) Specifications of I/O connector (CN2)

Terminal configuration	No.	Signal	Signal name	Diagram of Internal circuit
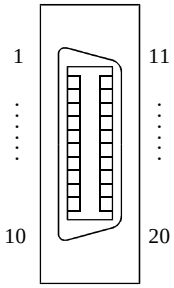	1	5 V DC +	Pulse output power supply	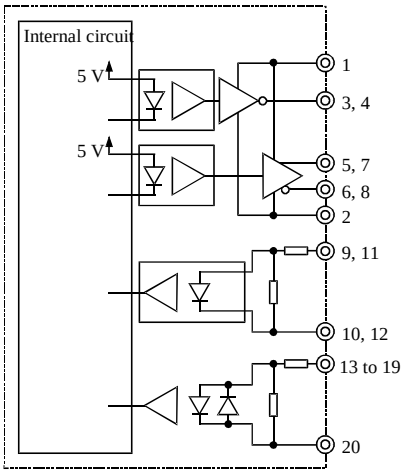
	2	0 V		
	3	CW	Open collector pulse output	
	4	CCW		
	5	CW +	Line driver pulse output	
	6	CW -		
	7	CCW +		
	8	CCW -		
	9	C +	Encoder C phase	
	10	C -		
	11	PS -	Encoder position signal	
	12	PS +		
	13	COIN	Positioning complete	
	14	PROG	Home position LS	
	15	+ 0.RUN	+ Overrun	
	16	- 0.RUN	- Overrun	
	17	MODE - SEL	Control mode switch	
	18	M - CW	Manual CW	
	19	M - CCW	Manual CCW	
	20	24 V DC +	Control power supply	

8.2 High Speed Counter Module

Name and function of each part	Type (Weight)	EH-CU (0.16 kg (0.35 lb))
EH-CU: 2-ch High speed counter, EH-CUE: 1-ch High speed counter		EH-CUE (0.16 kg (0.35 lb))
	Dimensions (mm (in.))	

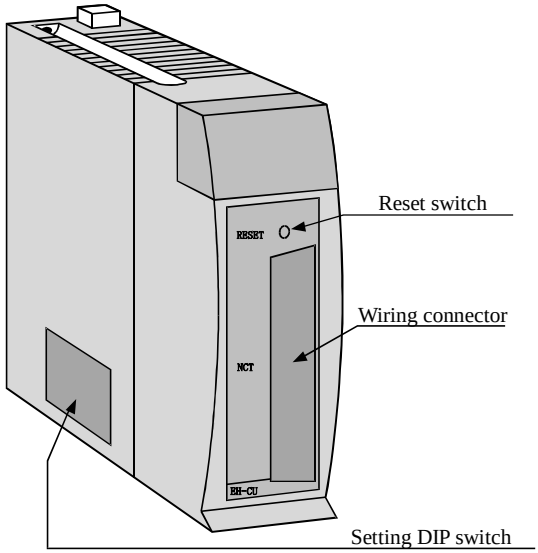

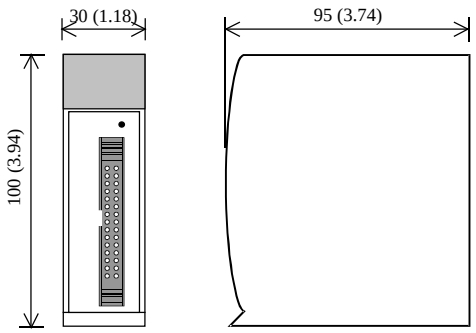

Name	Description
Reset switch	The module is reset if this switch is pressed.
Wiring connector	This is a connector with 30 pins (15×2 lines) for connecting the external wiring. Note) In EH-CU, common to 2 channels Applicable connector on the module side Manufacturer: Hirose Electric Co. Type: HIF3BA-30PA-2.54DS (30 pins male) Applicable connector on the wiring side Manufacturer: Hirose Electric Co. Type: HIF3BA-30D-2.54C (30 pins connector) HIF3-2226SCC (connector pin) HIF3-TB2226HC (crimp tool) HIF3--30CV (connector cover)
Setting DIP switch	Performs each initial setting of EH-CU and EH-CUE. Turn off the power and remove the module from the base to change the setting.

LED name

External view of LED part	LED name	Details	Color
1A 1B 1M PW 2A 2B 2M ER 0 1 2 3 COUNTER EH-CU EH-CU (2-ch type)	PW	Lighted when the power is ON and the module operates regularly.	Green
	ER	Lighted when the hardware error of the module occurs.	Red
	1A	Lighted depending on ON / OFF of the A-phase input signal of Channel 1.	Green
	1B	Lighted depending on ON / OFF of the B-phase input signal of Chnnale1.	Green
	1M	Lighted depending on ON / OFF of the marker input signal of Channel 1.	Green
	2A	Lighted depending on ON / OFF of the A-phase input signal of Channel 2.	Green
	2B	Lighted depending on ON / OFF of the B-phase input signal of Channel 2.	Green
	2M	Lighted depending on ON / OFF of the marker input signal of Channel 2.	Green
1A 1B 1M PW ER 0 1 COUNTER EH-CUE EH-CUE (1-ch type)	0	Lighted depending on ON / OFF of Y0 output terminal.	Green
	1	Lighted depending on ON / OFF of Y1 output terminal.	Green
	2	Lighted depending on ON / OFF of Y2 output terminal.	Green
	3	Lighted depending on ON / OFF of Y3 output terminal.	Green

* “ER” LED lights up for an instance if the reset switch is pressed down. That is no error.

Purpose	Applied switch	Bit1	Bit 2	Explanation
Select the counter mode (Common between channels)	Bit 1, 2 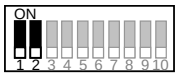	OFF	OFF	2-phase counter (100 kHz at the maximum)
		OFF	ON	1-phase counter (CW, CCW)
		ON	OFF	1-phase counter (CK, UP / DOWN)
		ON	ON	2-phase multiplied by 4 counter (25 kHz at the maximum)

Purpose	Applied switch		Explanation
Select the marker polarity	Bit 3 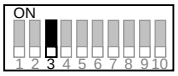	OFF	Channel 1 Detects the marker at the input OFF edge.
		ON	Channel 1 Detects the marker at the input ON edge.
	Bit 4 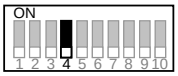	OFF	Channel 2 Detects the marker at the input OFF edge.
		ON	Channel 2 Detects the marker at the input ON edge.
Select counting operation during STOP	Bit 5 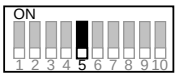	OFF	Channel 1 Stops counting while the CPU module stops.
		ON	Channel 1 Keeps counting while the CPU module stops.
	Bit 6 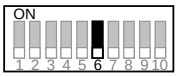	OFF	Channel 2 Stops counting while the CPU module stops.
		ON	Channel 2 Keeps counting while the CPU module stops.
Select normal counter / ring counter	Bit 7 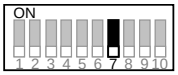	OFF	Channel 1 Normal counter
		ON	Channel 1 Ring counter
	Bit 8 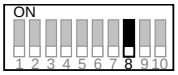	OFF	Channel 2 Normal counter
		ON	Channel 2 Ring counter
Select the test mode	Bit 9 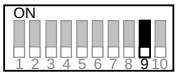	OFF	Normal operation
		ON	Test mode (Program for checking is started up.)

* Always use Bit 10 with OFF.

Specifications

Item		Specification	
Type		EH-CU	EH-CUE
Number of channels		2 channels	1 channel
Maximum number of counts		32 bits (0 to 4,294,967,295)	
Maximum frequency		100 k Hz (25 k Hz at multiplied by 4)	
Count mode		Select by setting of DIP switch. (EH-CU is common to both channels.) 2-phase, 1-phase (CW / CCW, CK, U / D), 2-phase multiplied by 4	
Differential input current		Min. 4 mA	
Differential input voltage		12 to 24 V DC	
	Minimum ON voltage	10 V DC	
	Maximum OFF voltage	4 V DC	
Insulation system		Photo-coupler	
Number of input points 3 points / CH	A:A, CW, CK	Phase difference of each channel (A - B) during 2-phase counting +45 ° to +125 ° when up, -45 ° to -125 ° when down	
	B:B, CCW, U / D		
	M: Marker (z)		
Minimum counter pulse width		ON: Min. 4 μs, OFF: Min. 4 μs	
Minimum marker pulse width		Min. 10 μs (detected at ON edge)	
External wiring method		30-pin batch connector for both channels	30-pin connector
External wiring		Wired with twisted pair cables and batch shielded cables	
Output voltage		12 / 24 V DC (Max. 30 V DC)	
Load current		Max. 20 mA / point	
Output method		Open collector output	
Minimum load current		1 mA	
Output delay time	ON → OFF	Max. 1 ms	
	OFF → ON	Max. 1 ms	
Voltage down at ON		Max. 1.5 V	
Number of external output points		4 points / module External terminal of output destination can be specified for each channel	2 points / module
	Normal counter	Current value = Set value 1, or Current value > Set value 1	
	Ring counter	Current value = Set value 2	
Leak current		Max. 0.5 mA	
Polarity		(-) common within the module	
External power supply		12 / 24 V DC (Max. 30 V DC)	
Insulation system		Photo-coupler	
Mounting position		Basic base, Expansion base (cannot mount on the remote base)	
Number of units to be mounted simultaneously		Unlimited within power supply capacity of the power module.	

Specifications of I/O terminal

EH-CU	Terminal configuration	No.	CH2	No.	CH1	Meaning of signal	
		16	Vin A	1	Vin A	Phase A	Connects to a 12 to 24 V DC power supply at using voltage input.
		17	A (+)	2	A (+)		Connects (+) polarity at using differential input.
		18	A (-)	3	A (-)		Connects an open collector signal at using voltage input. Connects (-) polarity at using differential input.
		19	Vin B	4	Vin B	Phase B	Connects to a 12 to 24 V DC power supply at using voltage input.
		20	B (+)	5	B (+)		Connects (+) polarity at using differential input.
		21	B (-)	6	B (-)		Connects an open collector signal at using voltage input. Connects (-) polarity at using differential input.
		22	Vin M	7	Vin M	Marker	Connects to a 12 to 24 V DC power supply at using voltage input.
		23	M (+)	8	M (+)		Connects (+) polarity at using differential input.
		24	M (-)	9	M (-)		Connects an open collector signal at using voltage input. Connects (-) polarity at using differential input.
		25 to 27 N.C.		10 to 12 N.C.			Connect nothing.
		28	Y2	13	Y0	Output	Coincidence output. Connects to the other input.
		29	Y3	14	Y1		Coincidence output. Connects to the other input.
		30	Com2	15	Com1		(-) common for coincidence common. Commons 1 and 2 are independent.

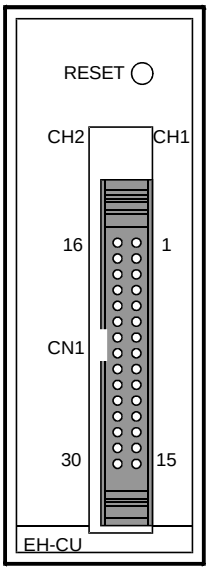

* Pin No. defined in EH-CU does not accord with pin No. defined by connector maker.

EH-CUE	Terminal configuration	No.	CH2	No.	CH1	Meaning of signal	
		16	N.C.	1	Vin A	Phase A	Connects to a 12 to 24 V DC power supply at using voltage input.
		17	N.C.	2	A (+)		Connects (+) polarity at using differential input.
		18	N.C.	3	A (-)		Connects an open collector signal at using voltage input. Connects (-) polarity at using differential input.
		19	N.C.	4	Vin B	Phase B	Connects to a 12 to 24 V DC power supply at using voltage input.
		20	N.C.	5	B (+)		Connects (+) polarity at using differential input.
		21	N.C.	6	B (-)		Connects an open collector signal at using voltage input. Connects (-) polarity at using differential input.
		22	N.C.	7	Vin M	Marker	Connects to a 12 to 24 V DC power supply at using voltage input.
		23	N.C.	8	M (+)		Connects (+) polarity at using differential input.
		24	N.C.	9	M (-)		Connects an open collector signal at using voltage input. Connects (-) polarity at using differential input.
		25 to 27 N.C.		10 to 12 N.C.			Connect nothing.
		28	N.C.	13	Y0	Output	Coincidence output. Connects to the other input.
		29	N.C.	14	Y1		Coincidence output. Connects to the other input.
		30	N.C.	15	Com1		(-) common for coincidence output.

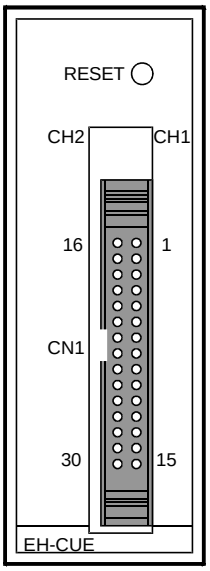

* Pin No. defined in EH-CUE does not accord with pin No. defined by the connector maker.

MEMO

Chapter 9 Communication and Network Module

9.1 CPU Link Module

Coaxial cable type

Name and function of each part	Type (Weight)	EH-LNK (Approx. 0.15 kg (0.33 lb))
	Dimension (mm (in.))	

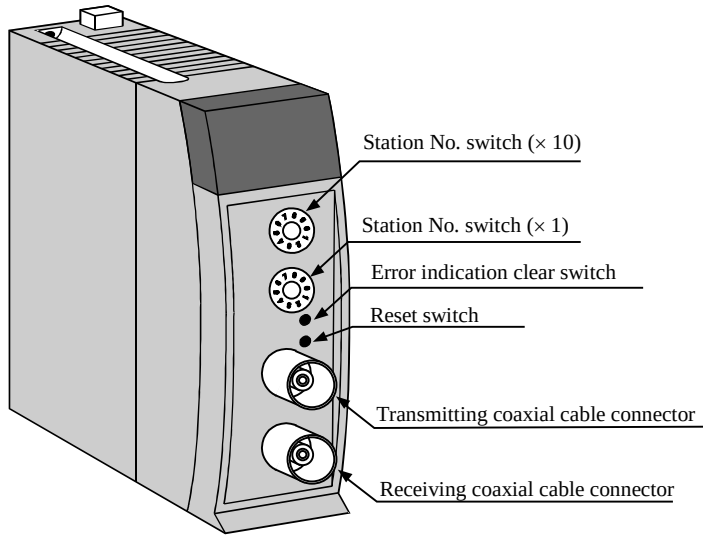

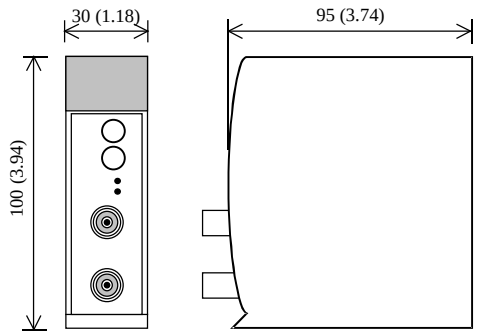

Name	Description
Station No. switch (× 10)	This switch determines the link station No. The setting of this switch is validated when the power is turned on or the reset switch is pressed. The setting range is between 00 and 63. Example) Sets the station No. to 18. 10-digit … 1 1-digit … 8 } Station No. 18 - Setting of 64 or higher triggers an out-of-range error for the station No. - Duplication of station No. triggers a duplication error for the station No. - If there is no station No.00 (master station) in the link system, it cannot work normally.
Station No. switch (× 1)	
Error indication clear switch	Clears the indication displayed on ERR LED. (ERR LED will light up again if the error factor is not resolved.)
Reset switch*	The module is reset if this switch is pressed.
Transmitting coaxial cable connector (TXD)	Transmits data from the own station. Connect to RXD on the next station using a coaxial cable.
Receiving coaxial cable connector (RXD)	Receives data from other station. Connect to TXD on the next station using a coaxial cable.

* The CPU module will detect a “Link Module Error (error code: 74H)” if the reset switch is pressed. Please resolve the error of the CPU module after making sure that the link module is operating normally.

LED name

Front view of LED part	LED	Details	Color
CPU LINK EH-LNK RUN TxD ERR RxD	TxD	Flashes when data is received.	Yellow green
	RxD	Flashes when data is transmitted.	Yellow green
	RUN	Lights up when the link module is operating properly.	Yellow green
	ERR	Normal state : OFF Error (data link is possible) : Flashing (in 1 s interval) Error (data link is impossible) : Flashing (in 0.5 s interval), turn on	Red

Optical cable type

Name and function of each part	Type (Weight)	
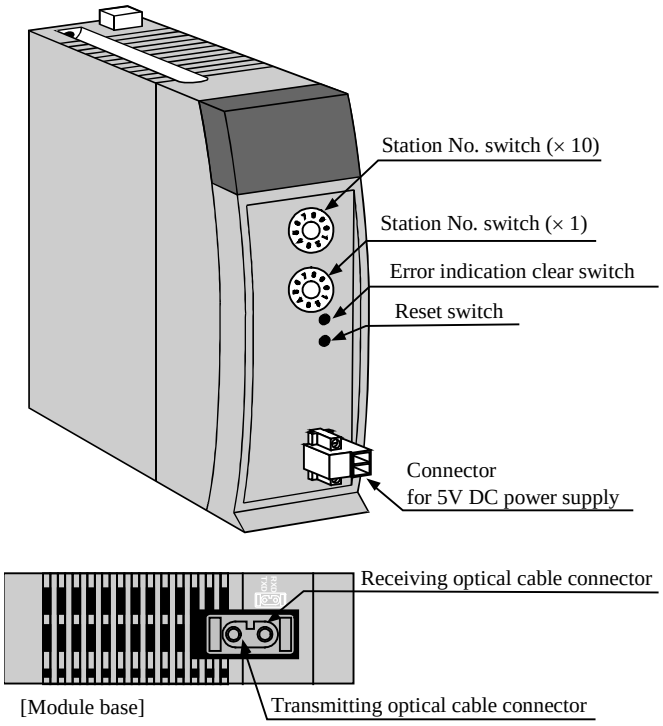		EH-OLNK (Approx. 0.15 kg (0.33 lb))
		EH-OLNKG (Approx.0.15 kg (0.33 lb))
		EH-OLNKE (Approx. 0.15 kg (0.33 lb))
	Dimensions (mm (in.))	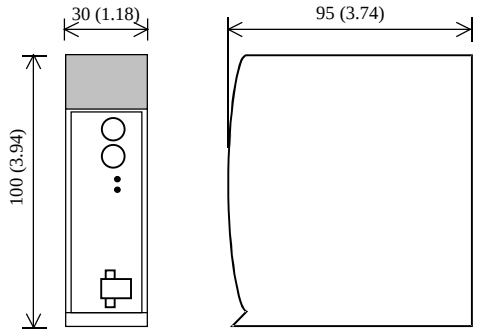

Name	Description
Station No. switch (× 10)	This switch determines the link station No. The setting of this switch is validated when the power is turned on or the reset switch is pressed. The setting range is between 00 and 63. Example) Sets the station No. to 18. 10-digit … 1 1-digit… 8 } Station No. 18 - Setting of 64 or higher triggers an out-of-range error for the station No. - Duplication of the station No. trigger a duplication error for the station No. - If there is no station No.00 (master station) in the link system, it cannot operate normally.
Station No. switch (× 1)	
Error indication clear switch	Clears the indication displayed on ERR LED. (ERR LED will light up again if the error factor is not resolved.)
Reset switch*	The module is reset if this switch is pressed.
Connector for 5V DC power supply	Supply 5 V DC from another power source if the link system needs to work while this module is not powered.
Receiving optical cable connector (RXD)	Receives data from other station. Connect to TXD on the next station by an optical cable.
Transmitting optical cable connector (TXD)	Transmits data from other station. Connect to RXD on the next station by an optical cable.

* If the reset switch is pressed, the CPU module will detect a “Link Module Error (error code: 74H)”. Please resolve the error of the CPU module after making sure that the link module is operating normally.

LED name

Front view of LED part	LED	Details	Color
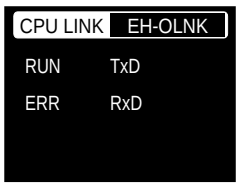	TxD	Flashes when data is received.	Yellow green
	RxD	Flashes when data is transmitted.	Yellow green
	RUN	Lights up when the link module is operating properly.	Yellow green
	ERR	Normal state : OFF Error (data link is possible) : Flashing (in 1s interval) Error (data link is impossible) : Flashing (in 0.5 s interval), turn on	Red

Specifications (CPU link module (coaxial, optical))

Item			Specification
Functional Specification	Number of connected link modules		64 units at the maximum per link system
	Number of link points		1,024 words per loop (2,048 words per 2 loops)*1
	Data delivery system		Common data area system
	Transmit / Receive distinction on data area allocation		Parameter setup from peripheral devices
	Station No. specifying		Specifies 0 to 63 by a rotary switch.
	Transmission speed		1.0 Mbps
	Transmission method		Half-duplex serial transmission, frame synchronization
	Communication method		Token passing
	Modulation method		Base band
	Refresh time		At 64 stations connection and 1024 words transfer; Approx. 390 ms
	Error check		CRC, overrun check, timeout, open circuit parameter error (Dual specifying of station No., overlap of link area, etc.)
	Self-diagnosis		System ROM / RAM check, watchdog timer check, transmission loop back check
Transmission channel Specification	Transmission channel form		Loop type
	Cable length	Between stations	Maximum 500 m (EH-LNK), Maximum 1,000 m (EH-OLNK), Maximum 2,000 m (EH-OLNKG,E)
		Total extension	Maximum 1,000 m (EH-LNK), Maximum 15,000 m (EH-OLNK,EH-OLNKG,E)
	Error station processing		Bypass system (coaxial), Bypass system (optical; only when supplying 5 V DC from another power source)
	Recommended cable (EH-LNK)		Coaxial cable with shield (equivalent to the 5D-2V with shield)
	Recommended connector (EH-LNK)		Link module side: equivalent to 413631-1 (by AMP)
	Recommended cable and connector (Refer to the instruction of each module for more details.)	EH-OLNK	CA7103- 1 M- 2 L 3 1 Hitachi Hybrid Network Co., Ltd. 1 : cable length, 2 : cable type, 3 : core number
		EH-OLNKG, EH-OLNKE	CA9103S- 1 M-AL11 Hitachi Hybrid Network Co., Ltd. CA9003S- 1 M-AL12 CA9103S- 1 M- 2 B 1 : cable length, 2 : core number For the recommended cable of EH-OLNKE, add “-625” at the end of above types.
Mounting position			Slot 0 to 7 on the basic base

*1 Power failure memory protection is not possible.

9.2 PROFIBUS-DP Master Module 2

Name and function of each part		Model name	EH-RMP2
		Weight	0.16 kg (0.35 lb)
		Current consumption (5 V DC)	0.78 A
		Dimensions (mm (in.))	

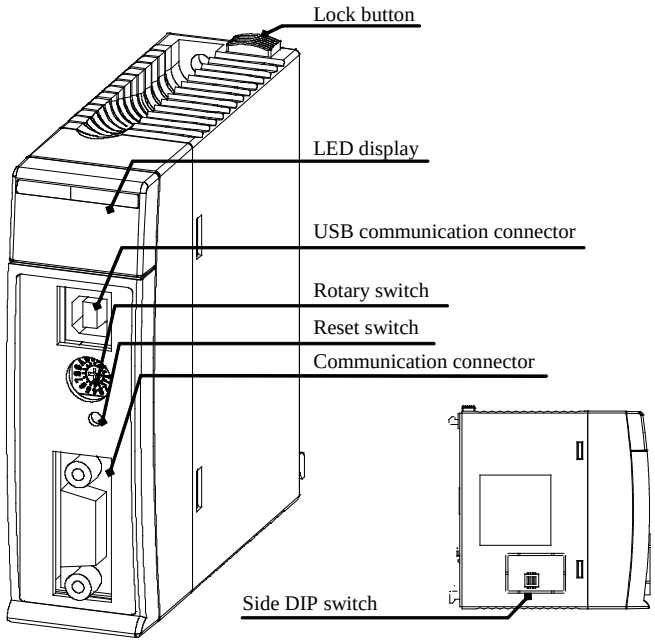

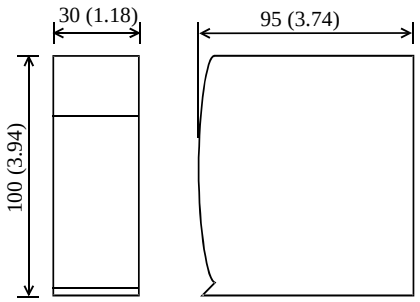

Name	Function	Remarks
Lock button	Press this button to dismount. Module can be fixed firmly by a screw of M4 × 10mm (0.39in).	
Communication connector	D-sub 9-pin connector for communication cable.	
USB communication connector	Type-B USB connector for configuration.	
LED display	The status of module is displayed on this LED.	
Rotary switch	This is a rotary switch to set network input / output sizes.	
Reset switch	The module can be reset by pressing this switch when the module detected an error. At the time the RDY LED is turned off immediately after the press, it will be reset.	Please do not press and hold the reset switch.
Side DIP switch	This is a switch to set an operation mode.	

Outline of communication connector	Symbol	Indication	Details
PROFIBUS 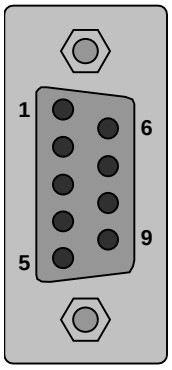	PROFIBUS	Communication connector	D-sub 9 pin connector. Terminal layouts are shown below.

Pin No.	Details
1	NC
2	NC
3	B-Line
4	NC
5	GND
6	+5 V DC
7	NC
8	A-Line
9	NC

Description of LED display

<table>
<tr><th>LED</th><th>LED name</th><th>Indication</th><th>Details</th></tr>
<tr><td rowspan="5"> 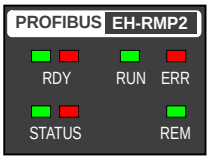
</td><td>RDY</td><td>Hardware status
(Green / Red)</td><td>Display EH-RMP2 hardware status.
<table>
<tr><th>State</th><th>Details</th></tr>
<tr><td>Off</td><td>Hardware error
Power supply error</td></tr>
<tr><td>Flash in green or red</td><td>Initialization</td></tr>
<tr><td>Lit in red</td><td>Hardware error</td></tr>
<tr><td>Lit in green</td><td>No error</td></tr>
</table></td></tr>
<tr><td>STATUS</td><td>System status
(Green / Red)</td><td>Display EH-RMP2 system status.
<table>
<tr><th>State</th><th>Details</th></tr>
<tr><td>Off</td><td>Power supply error</td></tr>
<tr><td>Flash in red</td><td>Internal error</td></tr>
<tr><td>Lit in red</td><td>WDT error</td></tr>
<tr><td>Fifth-flash in green</td><td>Side DIP switch setting error</td></tr>
<tr><td>Forth-flash in green</td><td>Link parameter error</td></tr>
<tr><td>Triple-flash in green</td><td>Configuration data error</td></tr>
<tr><td>Double-flash in green</td><td>CPU module error</td></tr>
<tr><td>Single-flash in green</td><td>Initialization</td></tr>
<tr><td>Lit in green</td><td>No error</td></tr>
</table></td></tr>
<tr><td>RUN</td><td>Network status
(Green)</td><td>Display PROFIBUS network status.
<table>
<tr><th>State</th><th>Details</th></tr>
<tr><td>Off</td><td>No communication established</td></tr>
<tr><td>Blinking</td><td>Under communication establishment</td></tr>
<tr><td>On</td><td>Communication established</td></tr>
</table></td></tr>
<tr><td>ERR</td><td>Error status
(Red)</td><td>Display PROFIBUS error status.
<table>
<tr><th>State</th><th>Details</th></tr>
<tr><td>Off</td><td>Communication established</td></tr>
<tr><td>Blinking</td><td>Slave units at least one are not established</td></tr>
<tr><td>On</td><td>All slave units are not established</td></tr>
</table></td></tr>
<tr><td>REM</td><td>Operating mode
(Green)</td><td>No use. It is always off.</td></tr>
</table>

The state of LED is indicated below.

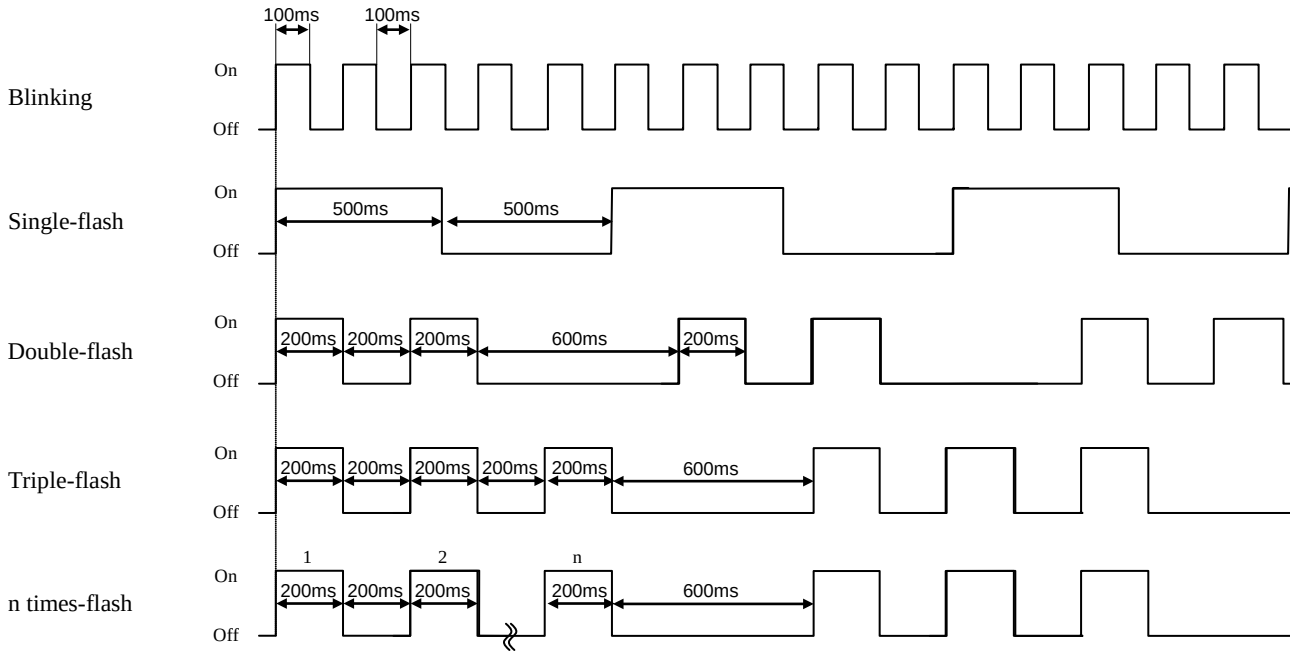

Description of Rotary switch

Rotary switch	Symbol	Meaning	Details of setting
MODE 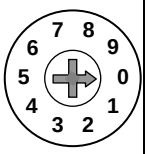 [Default setting: 0]	MODE	Input / Output Sizes	The input / output sizes of PROFIBUS network are set by rotary switch.

Value	Network size	Input size	Output size
0	Variable size	512 words max	512 words max
1	64W / 64W fixed	64 words	64 words
2	128W / 128W fixed	128 words	128 words
3	256W / 256W fixed	256 words	256 words
4	512W / 512W fixed	512 words	512 words
5	Variable size	512 words max	512 words max
6			
7			
8			
9			

In case of the compatible mode, the input / output sizes of PROFIBUS are fixed at 256words / 256words in spite of setting of this switch.

Please set rotary switch to 0 if you use auto addressing function with use of the SYCON.net. If you map each slave I/O address including offset address, please set rotary switch value 1, 2, 3 or 4. When actual input / output sizes exceed setting sizes, EH-RMP2 detects error.

Description of Side DIP switch

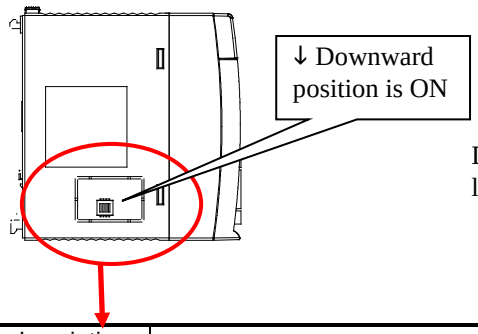

Downward position is ON side in case of side view like left figure.

No.	Setting description	Details
1	No use 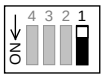 [Default setting: OFF]	Please keep off.
2	EH-RMP compatible mode 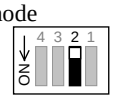 [Default setting: OFF]	OFF : Standard mode ON : Compatible mode
3,4	Output hold selecting 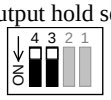 [Default setting: OFF]	When the CPU is switched from RUN to STOP position, it can select output status.

Bit4	Bit3	Position	Output hold function selection
OFF	OFF	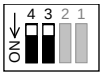	Clear mode. When the CPU is switched from RUN to STOP position, EH-RMP2 outputs the zero data to PROFIBUS slave. But the link area (%MW) is not cleared.
OFF	ON	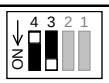	Freeze mode. When the CPU is switched from RUN to STOP position, EH-RMP2 holds output data that is last data received.
ON	OFF	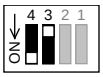	Copy mode. When the CPU is switched from RUN to STOP position, EH-RMP2 continues to copy in the link area (%MW).
ON	ON		Don’t care.

Performance specification

Item		Specifications		
		EH-RMP2		EH-RMP
		Standard mode	Compatible mode*	(Existing model)
Communication specifications	Communication protocol	PROFIBUS-DP V0		
	Range of node address	0 to 125: Setting by configuration tool		
	Maximum I/O size	Input: 512 words, output: 512 words (Setting by rotary switch)	Input: 256 words, output: 256 words	
	Connector	D-sub 9 pin		
	Topology	BUS		
	Communication cable	PROFIBUS cable		
	Segment length, Transmit speed	9.6 kbps : 1,200 m 19.2 kbps : 1,200 m 93.75 kbps : 1,200 m 187.5 kbps : 1,000 m 500 kbps : 400 m 1,500 kbps : 200 m 3 Mbps : 100 m 6 Mbps : 100 m 12 Mbps : 100 m		
	Maximum connectable number of slaves	125 slaves		
	Output hold	Supported (Clear mode, Freeze mode, Copy mode)		
	Termination	Not built-in		Built-in
	Configuration tool	SYCON.net		SyCon
Functional specifications	Number of modules	8 modules / CPU		
	Self-check	WDT check		WDT check System memory check
	Error indication	LED		

*: Compatible mode is available on SOFTWARE VER. 0114 or newer.

9.3 PROFIBUS-DP Slave Controller 2

Name and function of each part		Model name	EH-IOCP2
		Weight	0.14 kg (0.31 lb)
		Current consumption (5 V DC)	0.35 A
		Dimensions (mm (in.))	

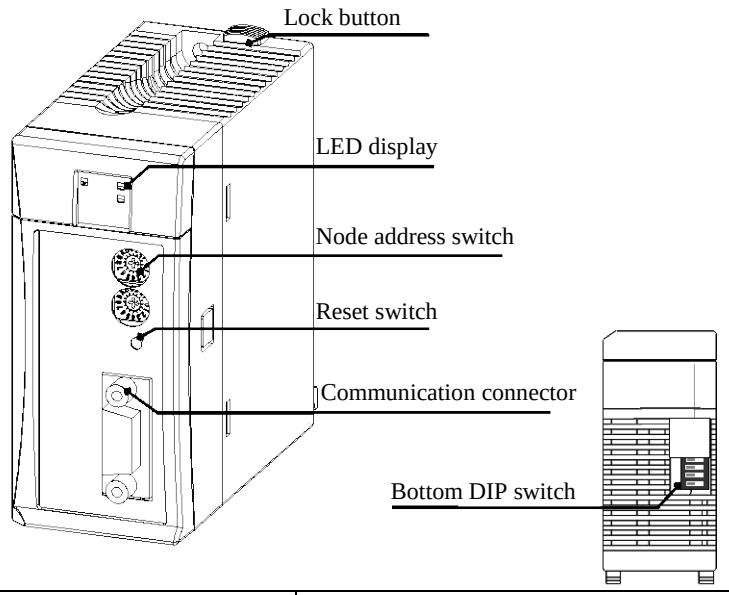

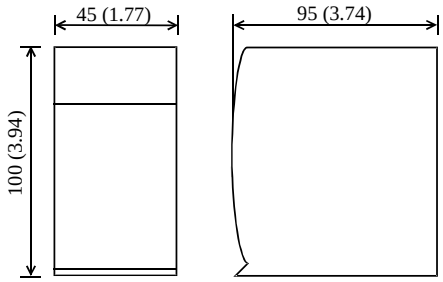

Name	Function	Remarks
Lock button	Press this button to dismount. Module can be fixed firmly by a screw of M4 × 10mm (0.39 in).	
Communication connector	D-sub 9-pin connector for communication cable.	
LED display	The status of module is displayed on this LED.	
Node address switch	This is a switch to set the node address.	
Reset switch	The module can be reset by pressing this switch when the module detected an error.	
Bottom DIP switch	This is a switch to set an operation mode (the output hold, etc.).	

Outline of communication connector	Symbol	Indication	Details
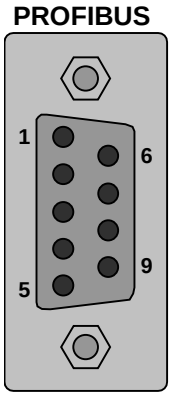	PROFIBUS	Communication connector	D-sub 9 pin connector. Terminal layouts are shown below.

Pin No.	Details
1	NC
2	NC
3	B-Line
4	NC
5	GND
6	+5 V DC
7	NC
8	A-Line
9	NC

Description of LED display

<table>
<tr><th>Outline</th><th>LED name</th><th>Indication</th><th>Details</th></tr>
<tr><td rowspan="3"> 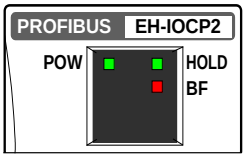
</td><td>POW</td><td>Power supply
(Green)</td><td>On : indicates that the 5 V DC power is supplied.
Off : indicates that the 5 V DC power is not supplied or reset switch is on.
<table>
<tr><th>State</th><th>Details</th></tr>
<tr><td>Off</td><td>Hardware error
Power supply error</td></tr>
<tr><td>n times flash</td><td>I/O modules failure (n is modules failure point)</td></tr>
<tr><td>On</td><td>No error</td></tr>
</table></td></tr>
<tr><td>HOLD</td><td>Output hold
(Green)</td><td>Display the output hold function status.
<table>
<tr><th>State</th><th>Details</th></tr>
<tr><td>Off</td><td>Disable the output hold function</td></tr>
<tr><td>On</td><td>Enable the output hold function</td></tr>
</table></td></tr>
<tr><td>BF</td><td>Error
(Red)</td><td>Display PROFIBUS error status or EH-IOCP2 hardware status.
<table>
<tr><th>State</th><th>Details</th></tr>
<tr><td>Off</td><td>No error</td></tr>
<tr><td>Blinking</td><td>Communication timeout</td></tr>
<tr><td>Single-flash</td><td>Configration error
I/O modules failure</td></tr>
<tr><td>Double-flash</td><td>Mount not support modules
Mount at out of area</td></tr>
<tr><td>Triple-flash</td><td>I/O data size over or zero.</td></tr>
<tr><td>On</td><td>Internal error</td></tr>
</table></td></tr>
</table>

The state of LED is indicated below.

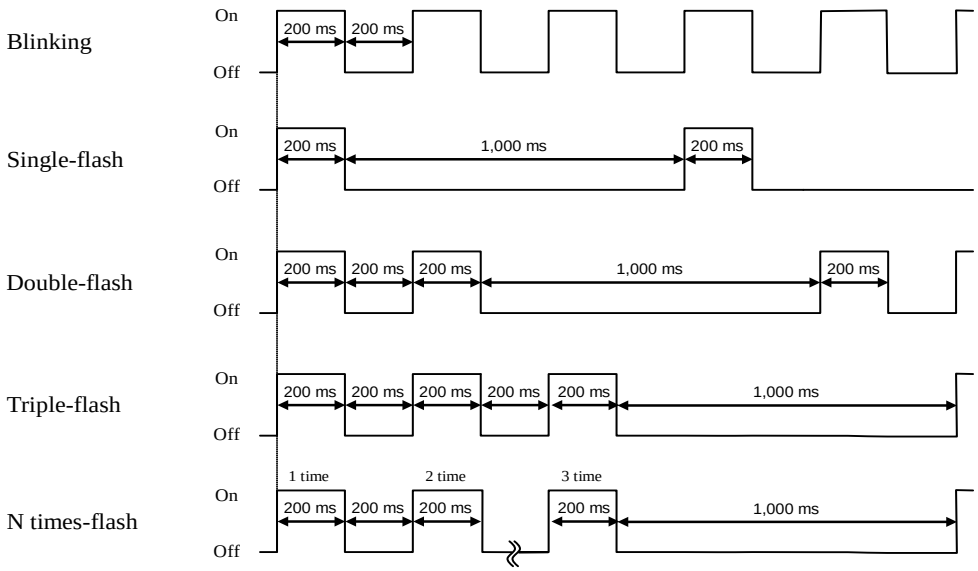

Description of Rotary switch

Rotary switch	Symbol	Meaning	Details of setting
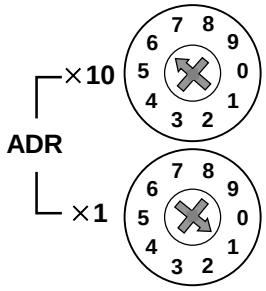 [Default setting : 00]	×10 (Tens place)	Station No. (00 to 99)	The station No. of PROFIBUS network is set from 00 to 99. The tens place set by upper rotary switch. The ones place set by lower rotary switch.
	×1 (Ones place)		

Description of Bottom DIP switch

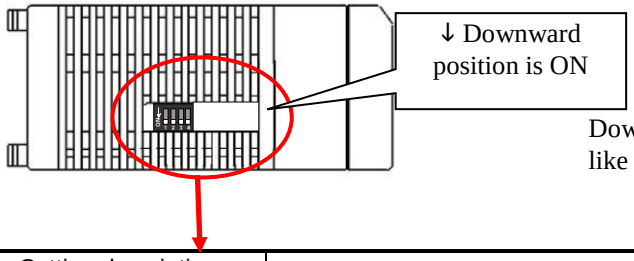

Downward position is ON side in case of bottom view like left figure.

No.	Setting description	Details
1	Output hold function selecting 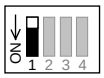 [Default setting: OFF]	When the PROFIBUS master's communication stopped, it is selected whether the output data from the master is held or not. (Hold means the last data received properly is fixed.) Output hold function may be changed action depending on master unit. Please read master's manual and check the combination master unit and EH-IOCP2, before using output hold function of EH-IOCP2. **Bit1 / Position / Output hold function selection** OFF — 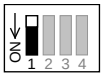 — Disable the output hold function (Turn off all output data from the master at the communication stopped.) ON — — Enable the output hold function (At the communication stopped, output data from master is held with last data received properly.)
2	EH-IOCP compatible mode selecting [Default setting: OFF]	It can select whether the EH-IOCP2 operates as standard mode or compatible mode. **Bit2 / Position / EH-IOCP compatible mode selection** OFF — — Standard mode (EH-IOCP2) ON — — Compatible mode (EH-IOCP)
3	Data swap function selecting 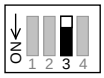 [Default setting: OFF]	It can select whether it performs byte swap by a word unit. **Bit3 / Position / Data swap function selection** OFF — — Disable the data swap function ON — 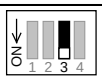 — Enable the data swap function
4	No use [Default setting: OFF]	Please keep off.

Performance specification

Item		Specifications		
		EH-IOCP2		EH-IOCP (Existing model)
		Standard mode	EH-IOCP compatible mode	
Communication specifications	Communication protocol	PROFIBUS-DP V0		
	Range of node address	0 to 99 : Setting by rotary switch		
	Maximum I/O size	Input : 244 bytes, Output : 244 bytes*1		
	Connector	D-sub 9 pin		
	Topology	BUS		
	Communication cable	PROFIBUS cable		
	Segment length, Transmit speed	9.6 kbps : 1,200 m 19.2 kbps : 1,200 m 93.75 kbps : 1,200 m 187.5 kbps : 1,000 m 500 kbps : 400 m 1,500 kbps : 200 m 3 Mbps : 100 m 6 Mbps : 100 m 12 Mbps : 100 m		
	Output hold	Supported*2		
	Data swap	Supported		Not supported
	Termination	Not built-in		Built-in
	GSD file	HITA0E64.GSD	HITA049D.GSD	
Functional specifications	Support base unit	EH-BS3 / 5 / 8 / 3A / 5A / 6A / 8A / 11A / 8R	EH-BS3 / 5 / 8 / 3A / 5A / 6A / 8A	
	Number of modules	22 modules / EH-IOCP2	16 modules / EH-IOCP(2)	
	Number of I/O points	1,408 points: Digital I/O 176 ch : Analog I/O*2	1,024 points: Digital I/O, 128 ch : Analog I/O	
	Expansion unit	1 (use by EH-IOC, EH-IOCH and EH-IOCH2)		
	Refresh time	500 µs		5 ms
	Self-check	WDT check		WDT check System memory check
	Error indication	LED		

*1 Each I/O size of EH-IOCP2 is expanded from 128 bytes to 244 bytes by software version 0014 or newer.
*2 The output hold function of EH-IOCP2 is supported by software version 0014 or newer.

9.4 EtherCAT Slave Controller

Name and function of each part	Model name	EH-IOCA
	Weight	0.14 kg
	Dimensions (mm (in.))	

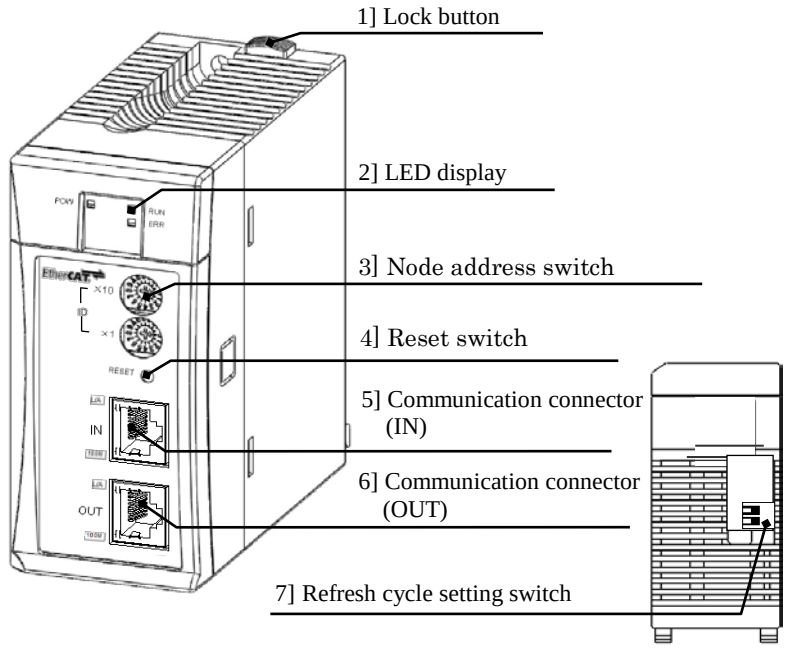

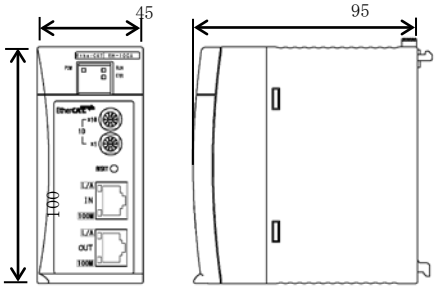

No.	Name	Function	Remarks
1]	Lock button	Press this button to dismount. Module can be fixed firmly by a screw of M4 × 10mm (0.39in).	—
2]	LED display	The status of module is displayed on this LED.	—
3]	Node address switch	This is a switch to set the node address.	—
4]	Reset switch	The module can be reset by pressing this switch when error such as the module abnormal occurred.	—
5]	Communication connector (IN)	This is a connector to connect a cable for communication.	—
6]	Communication connector (OUT)	This is a connector to connect a cable for communication.	—
7]	Refresh cycle setting switch	This is a switch to set the refresh cycle of the mounted module.	Supported on HARDWARE REV. 02

Description of LED display

<table>
<tr><th>Outline</th><th>LED name</th><th>Indication</th><th>Details</th></tr>
<tr><td rowspan="3"> 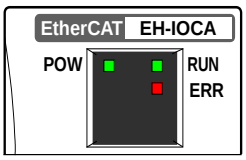
</td><td>POW</td><td>Power supply
(Green)</td><td>On : indicates that the 5V DC power is supplied.
Off : indicates that the 5V DC power is not supplied or reset switch is on.</td></tr>
<tr><td>RUN</td><td>Status
(Green)</td><td>Display an EtherCAT communication status.
<table>
<tr><th>State</th><th>Details</th></tr>
<tr><td>Off</td><td>Init</td></tr>
<tr><td>Blinking</td><td>PRE-OPERATIONAL</td></tr>
<tr><td>Single-flash</td><td>SAFE-OPERATIONAL</td></tr>
<tr><td>On</td><td>OPERATIONAL</td></tr>
</table></td></tr>
<tr><td>ERR</td><td>Error
(Red)</td><td>Display EtherCAT error status or EH-IOCA hardware status.
HARDWARE REV. 02 or newer
<table>
<tr><th>State</th><th>Details</th></tr>
<tr><td>Off</td><td>No error</td></tr>
<tr><td>Blinking</td><td>Configuration error</td></tr>
<tr><td>Double-flash</td><td>Application watchdog timeout</td></tr>
</table>
HARDWARE REV. 01
<table>
<tr><th>State</th><th>Details</th></tr>
<tr><td>Off</td><td>No error</td></tr>
<tr><td>Blinking</td><td>Configuration error</td></tr>
<tr><td>Single-flash</td><td>EtherCAT synchronism failure
Communication data failure</td></tr>
<tr><td>Double-flash</td><td>Application watchdog timeout</td></tr>
<tr><td>Flickering</td><td>Boot error</td></tr>
<tr><td>On</td><td>PDI watchdog timeout</td></tr>
</table></td></tr>
</table>

The state of LED is indicated below.

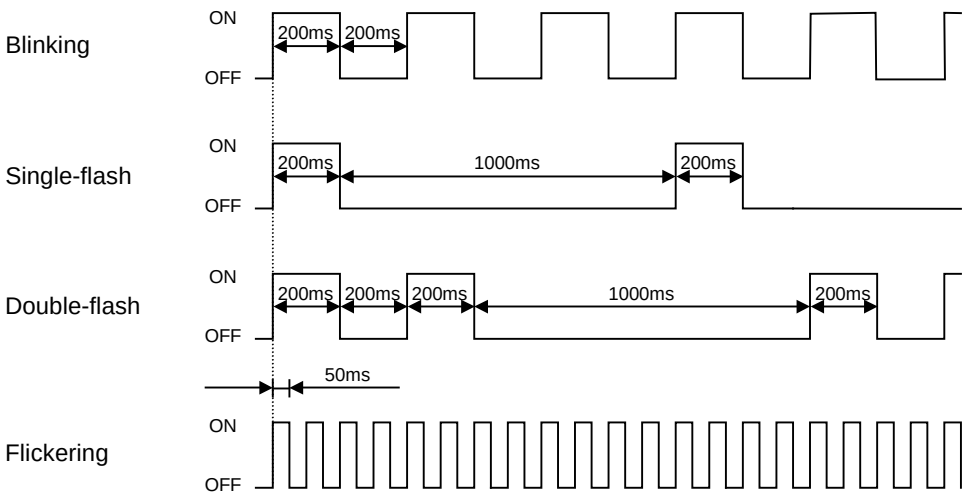

Description of Rotary switch

Rotary switch	Symbol	Meaning	Details of setting
HARDWARE REV. 02 or newer 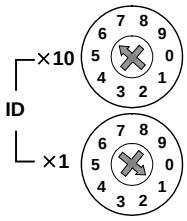 HARDWARE REV. 01 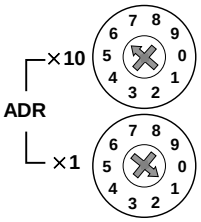 [Default setting : 00]	×10 (Tens place)	Station No. (1 to 99)	The Station No. of EtherCAT® network is set from 1 to 99. The tens place set by upper node address switch. The ones place set by lower node address switch.
	×1 (Ones place)		

Node address of EH-IOCA is set by node address method of EtherCAT® master unit. If EtherCAT® master use fixed node address method, node address switch of EH-IOCA is valid. If EtherCAT® master use logic node address method or auto increment address method, node address switch of EH-IOCA is invalid. If EtherCAT® master use logic nodes address method or auto increment address method, please set the node address switch to “00”.

Description of refresh cycle setting switch

Switch	Details of setting
No.2 OFF No.1 OFF 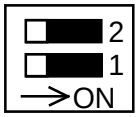 [Default setting: OFF]	Set the refresh cycle of the mounted module to 500 μs fixed. It is HARDWARE REV.01 compatibility mode.
No.2 OFF No.1 ON 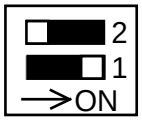 	The refresh cycle of the mounted module is automatically selected according to the size of the mounting module.

Total number of words of the mounting module	refresh cycle
1 to 22 words	62.5 μs
23 to 44 words	125 μs
45 to 88 words	250 μs
89 to 176 words	500 μs

Description of Connector

HARDWARE REV. 02 or newer

Connector	Symbol	Indication	Details
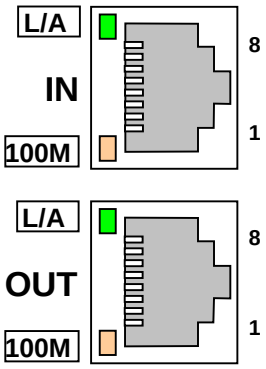	IN	Communication connector	RJ45 8-pin connector. Terminal layouts are shown below. Pin No. / Details 1 / Send data + (TD+) 2 / Send data - (TD-) 3 / Receive data + (RD+) 4 / NC 5 / NC 6 / Receive data - (RD-) 7 / NC 8 / NC
	OUT		
	L/A	Link status LED (Green)	LINK LED light up after LINK establishment of EtherCAT® communication, and it blinks during operation.
	100M	Communication Speed LED (Orange)	100M LED light up when LINK is established at 100 Mbps.

HARDWARE REV. 01

Connector	Symbol	Indication	Details
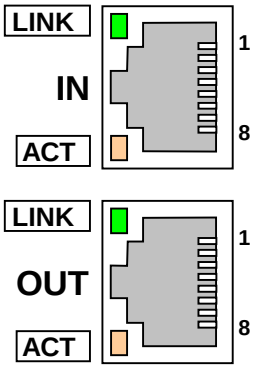	IN	Communication connector	RJ45 8-pin connector. Terminal layouts are shown below. Pin No. / Details 1 / Send data + (TD+) 2 / Send data - (TD-) 3 / Receive data + (RD+) 4 / NC 5 / NC 6 / Receive data - (RD-) 7 / NC 8 / NC
	OUT		
	LINK	LINK LED (Green)	LINK LED light up if the communication device are connected with a cable.
	ACT	ACT LED (Orange)	ACT LED is flashing during operation.

Recommended cable

Recommended cable of EH-IOCA is shown below. But if EH-IOCA is used in noisy environment, we recommend cables with double, aluminum tape and braided shielding.

Item	Details
Twisted pair cable	100BASE-TX (CAT 5 or higher) STP cable
RJ45 connector	CAT 5 or higher, Shielded

The maximum cable length between connected nodes is 100 m. Note that some cables do not guarantee 100 m. In general, if the conductors are strand wire, the transmission performance will be lower than solid wire and the operation at 100 m distance cannot be guaranteed. Confirm details with the cable manufacturer.

Performance specification

Item		Specifications	Remarks
Communication specifications	Communication protocol	EtherCAT® protocol	
	Transmit modulation method	Base band	
	Transmit speed	100 Mbps	
	Physical layer	100 BASE-TX (IEEE802.3)	
	Connector	RJ45 (IN, OUT)	
	Topology	Daisy-chain	
	Cable redundancy	Support *1	Supported on HARDWARE REV.02
	Recommended cable	CAT5 or higher, STP cable	
	Maximum segment length	100 m	
	Communication cycle	200 µs or over *2	
	Node address range	1 to 99 : Fixed node address 1 to 65,535 : Auto increment address	
	Process data	Fixed PDO mapping	
	Mailbox	Support	
	Cycle mode	Free Run mode (asynchronous)	
	Output hold	Support	
Functional specifications	Support base unit	EH-BS3A/5A/6A/8A/11A/8R	
	Number of modules	22 modules / EH-IOCA	
	Number of I/O points	1,408 points : Digital I/O 176 ch : Analog I/O	
	Expansion unit	1	
	Refresh cycle	Auto (62.5 / 125 / 250 / 500 µs), Fix (500 µs)	Supported on HARDWARE REV.02
	Self-check	WDT check	
	Error indication	LED	
	Supported ESI file	HITACHI_IES_EH-IOCA_2_0.xml	Refer below “Combination of EH-IOCA and ESI file”
	Current consumption	400 mA	

*1 When using the cable redundancy function, The EtherCAT® master also needs to support the cable redundancy function.

*2 The communication cycle is dependent on the specification of the EtherCAT Master.

Combination of EH-IOCA and ESI file

	EH-IOCA HARDWARE REV.01	EH-IOCA HARDWARE REV.02
ESI file (REV.01) EH_IOCA.xml	Possible	Impossible
ESI file (REV.02) HITACHI_IES_EH-IOCA_2_0.xml	Possible	Possible

Caution

When using EH-IOCA of HARDWARE REV.02 please use HITACHI_IES_EH-IOCA_2_0.xml for the ESI file. If EH-IOCA.xml corresponding to HARDWARE REV.01 is used, the system may malfunction.

9.5 FL-net Module 3

Name and function of each part	Model name	EH-FLN3
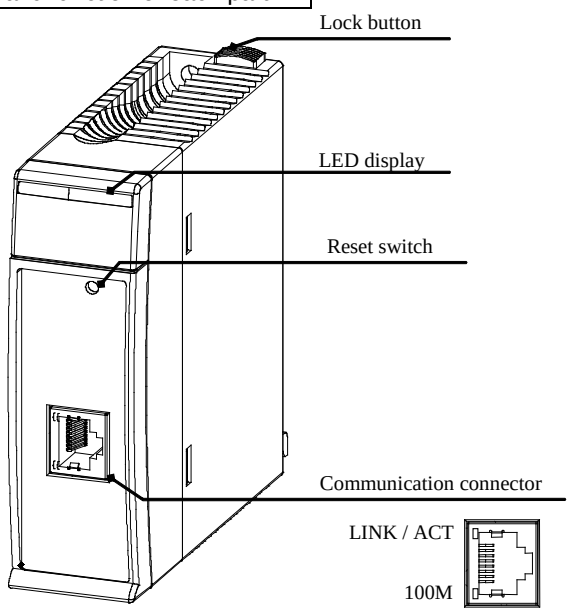	Weight	0.12 kg (0.26 lb)
	Dimensions (mm (in.))	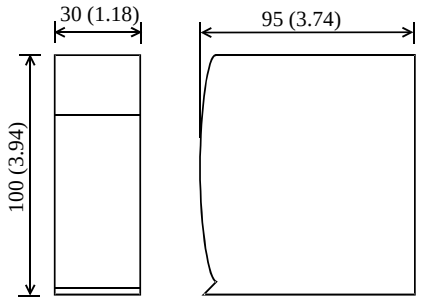

Name	Function	Remarks
Lock button	Press this button to dismount. Module can be fixed firmly by a screw of M4 × 10mm (0.39 in).	
Communication connector	RJ45 type connector. LINK / ACT LED is turned on green at the time of cable connection and blinking during communicating. 100M LED is turned on orange at 100 Mbps, and is turned off at 10 Mbps.	
LED display	The status of module is displayed on this LED.	
Reset switch	The module can be reset by pressing this switch when the module detected an error.	

Description of LED display

LED	LED name	Indication	Details
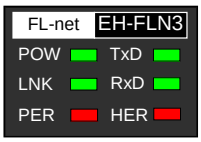	POW	Power supply (Green)	Display the power(5 V DC) status. State: Off — Details: Power off State: Lit in green — Details: Power on
	LNK	Network status (Green)	Display the entry state of FL-net network. State: Off — Details: Not participation in network State: Lit in green — Details: Participation in network
	TxD	Transmit (Green)	Display transmission status. State: Off — Details: Not sending data State: Lit in green — Details: Sending data
	RxD	Receive (Green)	Display receiving status. State: Off — Details: Not receiving data State: Lit in green — Details: Receiving data
	PER	Parameter error (Red)	Display parameter status. State: Off — Details: No error State: Lit in red — Details: Parameter error
	HER	Hardware error (Red)	Display hardware status. State: Off — Details: No error State: Lit in red — Details: Hardware error

Description of Side DIP switch

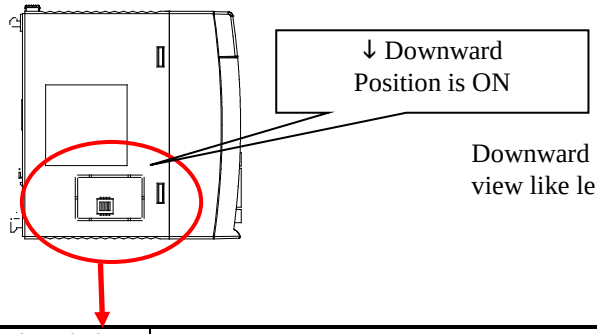

Downward position is ON side in case of side view like left figure.

No.	Setting description	Details
1	Communication mode selecting 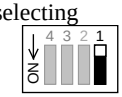 [Default setting: OFF]	Sets up the communication speed.
2	No use 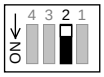 [Default setting: OFF]	Please keep off.
3	No use 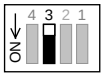 [Default setting: OFF]	Please keep off.
4	No use 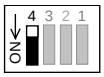 [Default setting: OFF]	Please keep off.

Bit1	Position	Communication mode
OFF	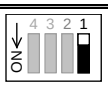	10M / 100 Mbps Auto negotiation
ON	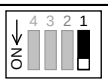	10 Mbps fixed

Performance specification

Item		Specifications
Communication specifications	Communication protocol	FL-net Ver.3.01 class 1
	Baud rate	10M / 100Mbps Auto Negotiation
	Modulation	Baseband transmission
	Electrical interface	Conforms to IEEE802.3 (Conforms to CSMA / CD)
	Communication protocol	UDP/IP FA link protocol
	Communication cable	10 / 100BASE-T CAT5(UTP)
	Maximum transmission distance	100m
	Maximum number of nodes	254 nodes
Functional specifications	Number of modules	2modules / CPU, Mounting position is the slot 0 to 7
	Cyclic transmission	Area1 : 8 kbits Area2 : 8 kwords
	Message transmission	Not supported
	Self-check	System memory check WDT check

9.6 Serial Interface Module

Name and function of each part	Type	EH-SIO
	Weight	Approx. 0.13 kg (0.29 lb)
	Dimensions (mm (in.))	

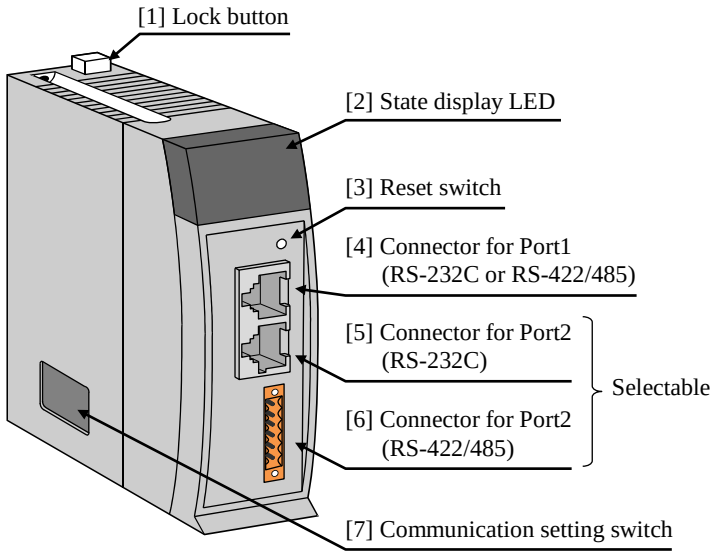

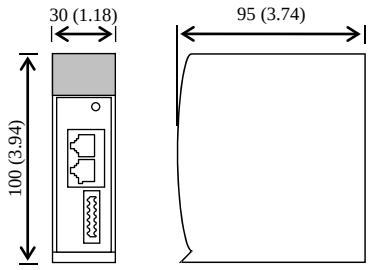

No.	Name		Function	Remark
[1]	Lock button		When dismounting the module from a base unit, press this button and lift up the module. The module can be fixed firmly by a screw (M4, 10 mm (0.39 in.)).	
[2]	State display LED		This LED displays the status of module.	
[3]	Reset switch		Resets when the module is abnormal.	
[4]	Connector for Port 1	RS-232C Port	Used to connect the RS-232C I/F.	Selection with Communication Setting Switch
		RS-422/485 Port *	Used to connect the RS-422 I/F or RS-485 I/F.	
[5] [6]	Connector for Port2	RS-232C Port	Used to connect the RS-232C I/F.	Selection with Communication Setting Switch
		RS-422/485 Port	Used to connect the RS-422 I/F or RS-485 I/F.	
[7]	Communication setting switch		The communication specification is configured by this switch. Please set according to connected devices after the power off and dismounting from a base unit.	

* Communication interface of Port 1 is selectable in hardware Rev. 10 or newer. The hardware before Rev. 10 supports RS-232C only.

Display of LED

Hard Rev. 04 or before

LNK WDE MDE CDE
SD1 RD1 SD2 RD2
MB1 HP1 MB2 HP2
MS1 MS2 422
SERIAL I/O EH-SIO

Hard Rev. 10 or newer

LNK WDE MDE CDE
SD1 RD1 SD2 RD2
MB1 HP1 MB2 HP2
MS1 422_1 MS2 422_2
SERIAL I/O EH-SIO

Appearance	LED	Contents of display	Details	Color
	LNK	Simple Data Link Mode *1	Lighting when the simple data link mode setting	Green
	WDE	Watchdog Timer Error	Lighting when MPU error (Serious failure) Port 1, Port 2 combined use	Red
	MDE	Module Error	Lighting when module error (Serious failure) Port 1, Port 2 combined use	Red
	CDE	Command Error	Lighting when the command error and so on (Minor failure) Port 1, Port 2 combined use	Red
	SD1	Send Data	Flickering when sending data (Port1)	Green
	RD1	Receive Data	Flickering when receiving data (Port1)	Green
	MB1	During Modbus Mode	Lighting on Modbus mode setting (Port1)	Green
	HP1	During Hi-Protocol Mode *1	Lighting on Hi-Protocol mode setting (Port1)	Green
	MS1	During Modbus Master Mode	Lighting on Modbus Master mode setting (Port1)	Green
	422_1	Select RS-422 / 485 I/F*2	Lighting when select the RS-422 / 485 I/F (Port1)	Green
	SD2	Send Data	Flickering when sending data (Port2)	Green
	RD2	Receive Data	Flickering when receiving data (Port2)	Green
	MB2	During Modbus Mode	Lighting on Modbus mode setting (Port2)	Green
	HP2	During Hi-Protocol Mode *1	Lighting on Hi-Protocol mode setting (Port2)	Green
	MS2	During Modbus Master Mode	Lighting on Modbus Master mode setting (Port2)	Green
	422_2	Select RS-422 / 485 I/F*2	Lighting when select the RS-422 / 485 I/F (Port2)	Green

*1 “Hi-Protocol” and “Simple data link” mode are supported by software ver. 2.0 or newer.
*2 Added / Changed from hardware Rev. 10.

Communication setup switch

There are 3 pieces of communication setting switches mounted. DIP Sw1, 4 are the setting switch for port 1 and DIP Sw2 is for port 2. (DIP Sw4 is the switch which added from hardware Rev. 10.) In case of set up, please remove the module from the base unit.

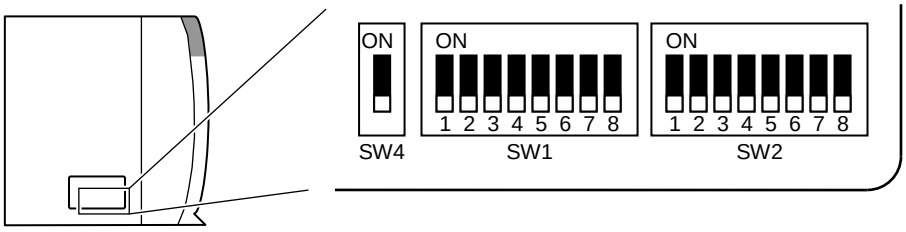

DIP Sw4

No.	Setup contents	Details
1	Communication I/F for Port 1	DIP Sw4 is used for select of communication I/F of Port 1. (RS-232C or RS-422 / 485) (RS-422 or 485 is switched by external wiring.)

DIP Sw4	Communication I/F for Port1
ON	RS-422 / RS-485 Port
OFF	RS-232C Port

* DIP Sw4 is added from hardware Rev. 10. Communication I/F of Port 1 can be selected by this switch.

DIP Sw1

No.	Setup contents	Details
1	Transmission speed	Bit 1, 2, 3, 4 are used for setting of transmission speed of Port 1.
2	Transmission format configuration	Bit 5, 6, 7 are used for setting of transmission format configuration of Port 1. 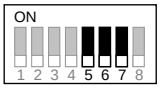

Bit1	Bit2	Bit3	Bit4	Transmission speed
OFF	OFF	OFF	OFF	Ineffective
OFF	OFF	OFF	ON	300 bps
OFF	OFF	ON	OFF	600 bps
OFF	OFF	ON	ON	1,200 bps
OFF	ON	OFF	OFF	2,400 bps
OFF	ON	OFF	ON	4,800 bps
OFF	ON	ON	OFF	9,600 bps
OFF	ON	ON	ON	19,200 bps
ON	OFF	OFF	OFF	38,400 bps
ON	OFF	OFF	ON	57,600 bps
ON	OFF	ON	OFF	Ineffective
ON	OFF	ON	ON	
ON	ON	OFF	OFF	
ON	ON	OFF	ON	
ON	ON	ON	OFF	
ON	ON	ON	ON	

Bit5	Bit6	Bit7	Transmission format configuration		
			Data length	Stop bit	Kind of parity bit
OFF	OFF	OFF	7	2	Even
OFF	OFF	ON	7	2	Odd
OFF	ON	OFF	7	1	Even
OFF	ON	ON	7	1	Odd
ON	OFF	OFF	8	2	None
ON	OFF	ON	8	1	None
ON	ON	OFF	8	1	Even
ON	ON	ON	8	1	Odd

* The system uses DIP switch 1 (Bit 8). Do not turn on it.

DIP Sw2

<table>
<tr><th>No.</th><th>Setup contents</th><th>Details</th></tr>
<tr><td>1</td><td>Transmission speed</td><td>Bit 1, 2, 3, 4 are used for setting of transmission speed of Port 2.
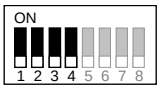

<table>
<tr><th>Bit1</th><th>Bit2</th><th>Bit3</th><th>Bit4</th><th>Transmission speed</th></tr>
<tr><td>OFF</td><td>OFF</td><td>OFF</td><td>OFF</td><td>Ineffective</td></tr>
<tr><td>OFF</td><td>OFF</td><td>OFF</td><td>ON</td><td>300 bps</td></tr>
<tr><td>OFF</td><td>OFF</td><td>ON</td><td>OFF</td><td>600 bps</td></tr>
<tr><td>OFF</td><td>OFF</td><td>ON</td><td>ON</td><td>1,200 bps</td></tr>
<tr><td>OFF</td><td>ON</td><td>OFF</td><td>OFF</td><td>2,400 bps</td></tr>
<tr><td>OFF</td><td>ON</td><td>OFF</td><td>ON</td><td>4,800 bps</td></tr>
<tr><td>OFF</td><td>ON</td><td>ON</td><td>OFF</td><td>9,600 bps</td></tr>
<tr><td>OFF</td><td>ON</td><td>ON</td><td>ON</td><td>19,200 bps</td></tr>
<tr><td>ON</td><td>OFF</td><td>OFF</td><td>OFF</td><td>38,400 bps</td></tr>
<tr><td>ON</td><td>OFF</td><td>OFF</td><td>ON</td><td>57,600 bps</td></tr>
<tr><td>ON</td><td>OFF</td><td>ON</td><td>OFF</td><td>Ineffective</td></tr>
<tr><td>ON</td><td>OFF</td><td>ON</td><td>ON</td><td></td></tr>
<tr><td>ON</td><td>ON</td><td>OFF</td><td>OFF</td><td></td></tr>
<tr><td>ON</td><td>ON</td><td>OFF</td><td>ON</td><td></td></tr>
<tr><td>ON</td><td>ON</td><td>ON</td><td>OFF</td><td></td></tr>
<tr><td>ON</td><td>ON</td><td>ON</td><td>ON</td><td></td></tr>
</table></td></tr>
<tr><td>2</td><td>Transmission format configuration</td><td>Bit 5, 6, 7 are used for setting of transmission format configuration of Port 2.
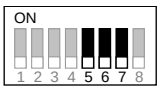

<table>
<tr><th rowspan="2">Bit5</th><th rowspan="2">Bit6</th><th rowspan="2">Bit7</th><th colspan="3">Transmission format configuration</th></tr>
<tr><th>Data length</th><th>Stop bit</th><th>Kind of parity bit</th></tr>
<tr><td>OFF</td><td>OFF</td><td>OFF</td><td>7</td><td>2</td><td>Even</td></tr>
<tr><td>OFF</td><td>OFF</td><td>ON</td><td>7</td><td>2</td><td>Odd</td></tr>
<tr><td>OFF</td><td>ON</td><td>OFF</td><td>7</td><td>1</td><td>Even</td></tr>
<tr><td>OFF</td><td>ON</td><td>ON</td><td>7</td><td>1</td><td>Odd</td></tr>
<tr><td>ON</td><td>OFF</td><td>OFF</td><td>8</td><td>2</td><td>None</td></tr>
<tr><td>ON</td><td>OFF</td><td>ON</td><td>8</td><td>1</td><td>None</td></tr>
<tr><td>ON</td><td>ON</td><td>OFF</td><td>8</td><td>1</td><td>Even</td></tr>
<tr><td>ON</td><td>ON</td><td>ON</td><td>8</td><td>1</td><td>Odd</td></tr>
</table></td></tr>
<tr><td>3</td><td>Communication I/F for Port 2</td><td>Bit 8 is used for select of communication I/F of Port 2. (RS-232C or RS-422 / 485)
(RS-422 or 485 is switched by external wiring.)
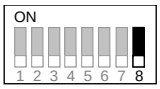

<table>
<tr><th>Bit8</th><th>Communication I/F for Port2</th></tr>
<tr><td>ON</td><td>RS-422 / RS-485 Port</td></tr>
<tr><td>OFF</td><td>RS-232C Port</td></tr>
</table></td></tr>
</table>

RS-232C connector

Terminal layout	No.	Symbol	Signal name	Diagram of Internal circuit
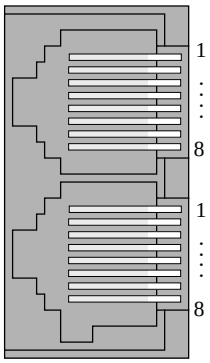	1	SG	Ground for signal	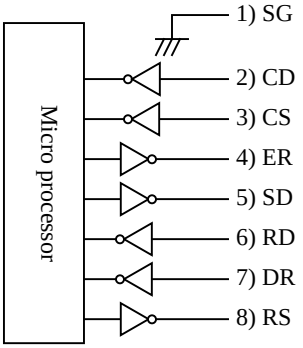
	2	CD	Carrier detect	
	3	CS	Clear to Send	
	4	ER	Communication enabled signal	
	5	SD	Data sent from EH-SIO	
	6	RD	Data received by EH-SIO	
	7	DR	Peripheral units connected signal	
	8	RS	Transmission request signal	

RS-422 / 485 connector
Port 1

Terminal layout	No.	Symbol	Signal name	Diagram of Internal circuit
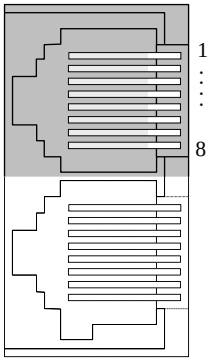	1	SG	Ground for signal	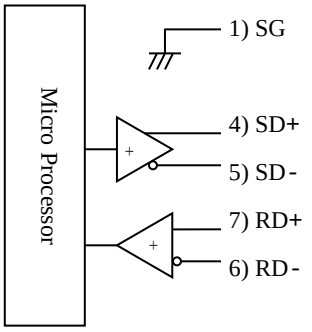
	2	N.C.	(Not used)	
	3	N.C.	(Not used)	
	4	SD+	Send data +	
	5	SD-	Send data –	
	6	RD-	Receive data –	
	7	RD+	Receive data +	
	8	N.C.	(Not used)	

Port 2

Terminal layout	No.	Symbol	Signal name	Diagram of Internal circuit
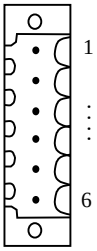	1	SD +	Send data +	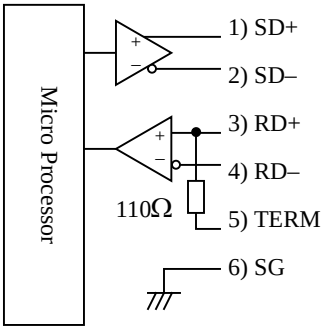
	2	SD –	Send data –	
	3	RD +	Receive data +	
	4	RD –	Receive data –	
	5	TERM	Built-in terminator	
	6	SG	Ground for signal	

Functional specifications

Item	Specification
Mounting position	Basic base and Expansion base (cannot mount on Remote base)
Number of units to be mounted at once	Unlimited within the range of power supply capacity of the power module. (The operation in the Modbus slave mode is 8 units at the maximum.)
Number of occupied I/O points	128 points
I/O assignment	Word 4W/4W
Supporting communication mode	No protocol, Modbus mater (RTU / ASCII*1), Modbus slave (RTU)

*1 Modbus master ASCII is available with CPU firmware version 3.5.13.40 or newer.

Communication specifications

Item		Specification	
Interface		Port 1	Selectable from RS-232C, RS-422, and RS-485*2
		Port 2	Selectable from RS-232C, RS-422, and RS-485
Transmission speed		Selectable from 300, 600, 1,200, 2,400, 4,800, 9,600, 19,200, 38,400, and 57,600 bps	
Transmission system		Bit serial system (Transmitted from the lowest bit of transmission signal)	
Synchronization		Asynchronous	
Transmission character configuration		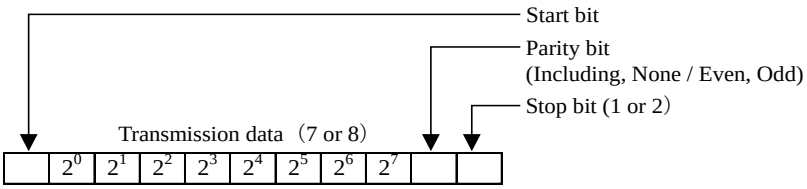	
Input buffer		1,024 bytes / port	
Output buffer		1,024 bytes / port	
Error control		Overrun error, framing error, parity error, input buffer full, message error, timeout error	
RS-232C port	Connection mode	1 : 1	
	Transmission distance	15 m (49.37 ft.) (Maximum)	
	Connector	RJ-45 connector	
RS-422 / 485 port	Connection mode	1 : N （N : 32 units at the maximum)	
	Transmission distance	500 m (548.61yd.) (Maximum)	
	Connector	Packaged connector (BL3.5/6F by Weidmuller)	

*2 Communication interface of Port 1 is selectable in hardware Rev. 10 or newer. The hardware before Rev. 10 supports RS-232C only.

9.7 DeviceNet Master Module 2

Name and function of each part

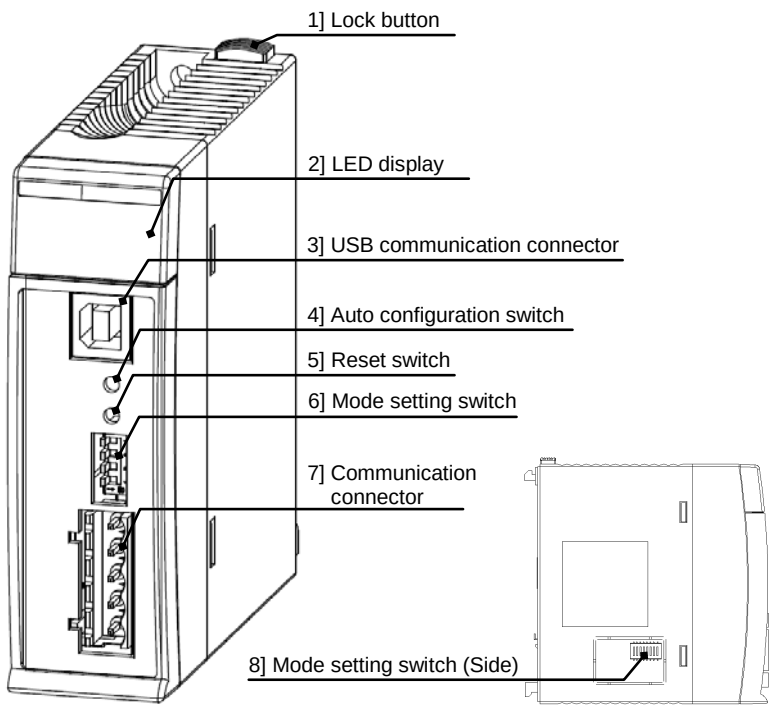

Model	EH-RMD2
Weight	0.12 kg (0.26 lb)

Dimensions (mm (in.))

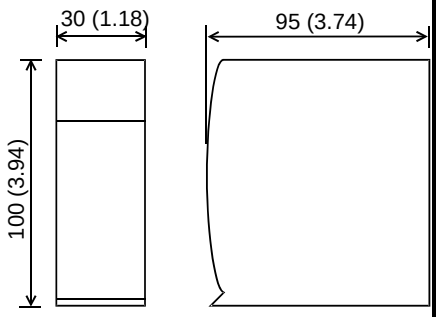

No.	Name	Function
1]	Lock button	Press this button to dismount. Module can be fixed firmly by a screw of M4 × 10mm (0.39in).
2]	LED display	The status of module is displayed on this LED.
3]	USB communication connector	Type-B USB connector for EH-RMD2 CONFIGURATOR.
4]	Auto configuration switch	Auto configuration switch.
5]	Reset switch	Reset switch when module error occurs.
6]	Mode setting switch	Master / slave and communication speed setting switch.
7]	Communication connector	Open plug connector for DeviceNet™ communication.
8]	Mode setting switch (Side)	Node address / remote size setting switch.

Description of Connection

Connector	Symbol	Indication	Details
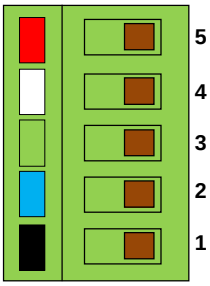	DeviceNet™	Communication connector	Open plug connector. Terminal layouts are shown below.

Pin No.	Signal	Wire color
5	V+	Red
4	CAN_H	White
3	Drain	Bare wire
2	CAN_L	Blue
1	GND	Black

Description of LED display

LED	LED name	Indication	Details
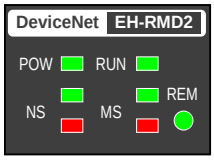	POW	Power supply (Green)	Indicating power and communication status. State: Details Lighting: - Power ON (DeviceNet™ communication in progress) Blinking: - Power ON (DeviceNet™ communication stopped) Off: - Power OFF
	MS	Module status (Green)	Indicating the module status. State: Details Lighting: - No error Blinking: - No configuration (Master setting) - Scan Interval error (Master setting) - I/O size is not set (Slave setting) Off: - Power OFF
		Module status (Red)	Indicating the module status. State: Details Lighting: - EH-RMD2 memory error - EH-RMD2 watch dog timer error - DeviceNet™ power off (Internal 5V DC power supply error) Blinking: - Before starting EH-RMD2 - Mode setting switch setting error - CPU module error - LINK parameter error (LINK setting) - I/O configuration error (REMOTE2 / REMOTE (RMM) setting) Off: - Power OFF
	NS	Network status (Green)	Indicating the network status. State: Details Lighting: - DeviceNet™ communication connection establishment Blinking: - DeviceNetTM communication connection not establishment Off: - DeviceNet™ power off
		Network status (Red)	Indicating the network status. State: Details Lighting: - MAC ID duplication - Busoff error Blinking: - Network error (Connection time out) Off: - No error
	REM	Mode (Green)	Indicating the mode. State: Details Lighting: - REMOTE2 mode Blinking: - REMOTE (RMM) mode Off: - LINK mode
	RUN	RUN / IDLE Mode (Green)	Indicating the RUN / IDLE mode. State: Details Lighting: - RUN mode (Synchronize with CPU module RUN) Blinking: - IDLE mode

Description of mode setting switch

No.	Setting description	Details
1	Master / Slave 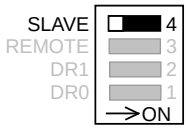 [Default setting : OFF]	Master / Slave setting SLAVE: OFF — Position: — Setting: Master SLAVE: ON — Position: — Setting: Slave
2	LINK / REMOTE [Default setting : OFF]	LINK / REMOTE setting Set LINK mode when using with HX-CPU. REMOTE: OFF, Side mode setting switch 7: OFF — Position: 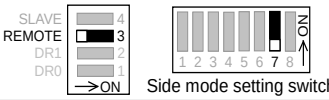 — Setting: LINK REMOTE: ON, Side mode setting switch 7: OFF — Position: 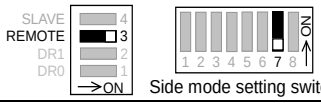 — Setting: REMOTE2 REMOTE: ON, Side mode setting switch 7: ON — Position: 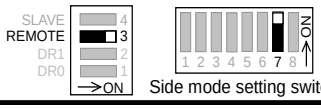 — Setting: REMOTE (RMM)
3	Communication speed [Default setting : OFF]	Communication speed setting DR0: OFF, DR1: OFF — Position: — Setting: 125kbps DR0: ON, DR1: OFF — Position: — Setting: 250kbps DR0: OFF, DR1: ON — Position: — Setting: 500kbps DR0: ON, DR1: ON — Position: Please do not set. — Setting: Can not be set.

Description of side mode setting switch

<table>
<tr><th>No.</th><th>Setting description</th><th>Details</th></tr>
<tr><td>1</td><td>MAC ID

[Default setting : OFF]</td><td>Please set the MAC ID with reference to the example below.
<table>
<tr><th>1</th><th>2</th><th>3</th><th>4</th><th>5</th><th>6</th><th>Position</th><th>Setting</th></tr>
<tr><td>OFF</td><td>OFF</td><td>OFF</td><td>OFF</td><td>OFF</td><td>OFF</td><td> </td><td>MAC_ID : 0</td></tr>
<tr><td>ON</td><td>OFF</td><td>OFF</td><td>OFF</td><td>OFF</td><td>OFF</td><td> </td><td>MAC_ID :1</td></tr>
<tr><td>OFF</td><td>ON</td><td>OFF</td><td>OFF</td><td>OFF</td><td>OFF</td><td> </td><td>MAC_ID :2</td></tr>
<tr><td colspan="8">⋮</td></tr>
<tr><td>OFF</td><td>ON</td><td>ON</td><td>ON</td><td>ON</td><td>ON</td><td> </td><td>MAC_ID :62</td></tr>
<tr><td>ON</td><td>ON</td><td>ON</td><td>ON</td><td>ON</td><td>ON</td><td> 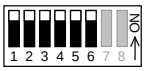 </td><td>MAC_ID :63</td></tr>
</table></td></tr>
<tr><td>2</td><td>REMOTE I/O size
 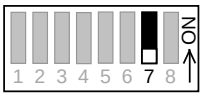

[Default setting : OFF]</td><td>REMOTE2 / REMOTE(RMM) setting.
Set OFF when using with HX-CPU.</td></tr>
<tr><td>3</td><td>System setting

[Default setting : OFF]</td><td>Please keep off.</td></tr>
</table>

Replacing from EH-RMD

There are some differences between EH-RMD2 and EH-RMD.

No.	Item	EH-RMD2	EH-RMD
1	Configuration-tool	EH-RMD2 CONFIGURATOR	EH-RMDCFG
2	Configuration-cable	USB cable (Same as USB cable for EHV-CPU)	Serial cable
3	Number of connections (At the same time)	1/node	3/node

It is possible to replace from EH-RMD to EH-RMD2 by the following procedure.

(1) Import EH-RMD configuration file to EH-RMD2 CONFIGURATOR.

(2) Set the mode setting switch to the same setting as EH-RMD.
(Master / Slave setting, LINK / REMOTE setting, communication speed)

(3) Download from EH-RMD2 CONFIGURATOR to EH-RMD2.

Specification

Item		Specifications
		EH-RMD2
Communication specifications	Communication protocol	Conform to DeviceNet™ Release 2.0
	Supported connection	(1) Polling I/O connection (2) Bit Strobe I/O connection (3) Cyclic I/O connection (4) Change of State I/O connection (5) Explicit Message I/O connection
	Number of connections (At the same time)	1/node
	Range of node address	0 to 63
	Maximum I/O size	Input : 256 words, output : 256 words (LINK)
	Connector	DeviceNet™ open plug connector
	Topology	Multi drop connection, Multi branch connection using by Device tap
	Communication cable	DeviceNet™ cable
	Maximum Segment length, Transmit speed	Baud rates / Network length: Thick cable / Thin cable / Each drop line length / Total drop line length
		500kbps: 100m / 100m / 6m / 39m
		250kbps: 250m / 100m / 6m / 78m
		125kbps: 500m / 100m / 6m / 156m
	Maximum number of slave connections	63 slaves
	Termination	Not Built-in
Functional specifications	Support CPU module *1	EH-CPU316A / 516 / 548, EHV-CPU08 / 16 / 32 / 64 / 128 EHV-CPU1025 / EHV-CPU1102 HX-CP1S08 / HX-CP1H16 / HX-CP1S08M / HX-CP1H16M / HXC-CP1H16
	I/O assignment	LINK / REMOTE2 / REMOTE (RMM)
	Number of modules: EH-CPU316A	LINK : 2 modules/CPU
	Number of modules: EH-CPU5**	LINK : 2 modules/CPU REMOTE2 : 4 modules/CPU
	Number of modules: EHV-CPU***	LINK : 8 modules/CPU REMOTE2 : 4 modules/CPU REMOTE (RMM) : 4 modules/CPU
	Number of modules: HX-CP****	LINK : 8 modules/CPU
	Slave mode	Supported
	Software reset	Supported
	Self-check	WDT check System memory check
	Current consumption	Approx. 300mA
	Standard compliant *2	CE
	Configurator *3	EH-RMD2 CONFIGURATOR
	Configurator Support OS	Windows 7 Windows 8.1 Windows 10
	Configurator connection module	EH-RMD2 (USB port)

*1 Supported I/O assignment of HX-CPU series is LINK only.
*2 UL is not supported. Contact your local supplier for further information.

9.8 DeviceNet Slave Controller 2

Name and function of each part	Model	EH-IOCD2
	Weight	0.14 kg (0.31 lb)
	Dimensions (mm (in.))	

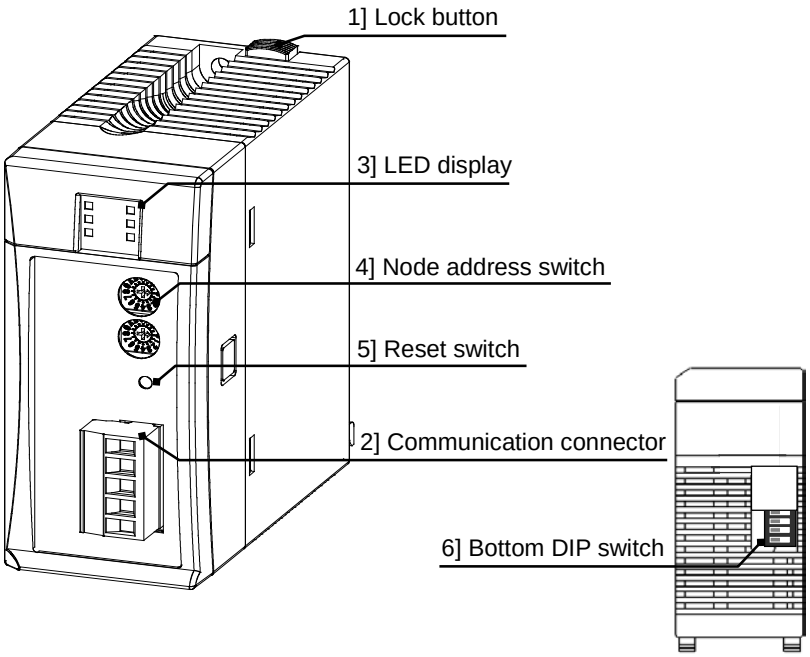

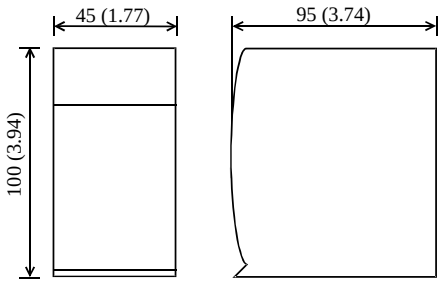

No.	Name	Function
1]	Lock button	Press this button to dismount. Module can be fixed firmly by a screw of M4 × 10mm (0.39in).
2]	Communication connector	Open plug connector for communication cable.
3]	LED display	The status of module is displayed on this LED.
4]	Node address switch	This is a switch to set the node address. Node address range is 00 to 63.
5]	Reset switch	The module can be reset by pressing this switch when the module detected an error.
6]	Bottom DIP switch	This is a switch to set an operation mode (the output hold, etc.).

Description of Connector

Connector	Symbol	Indication	Details
DeviceNet 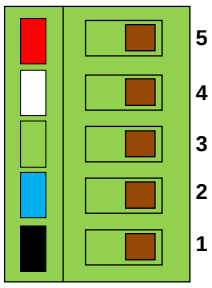 	DeviceNet	Communication connector	Open plug connector. Terminal layouts are shown below.

Pin No.	Signal	Wire color
5	V+	Red
4	CAN_H	White
3	Drain	Bare wire
2	CAN_L	Blue
1	GND	Black

Description of Rotary switch

Rotary switch	Symbol	Meaning	Details of setting
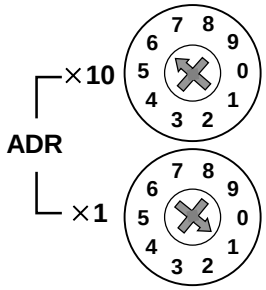 [Default setting: 00]	×10 (Tens place)	Station No. (00 to 63)	The station No. of DeviceNet network is set from 00 to 63. The tens place set by upper rotary switch. The ones place set by lower rotary switch. Node address range is 00 to 63. If you set higher than 63, EH-IOCD2 operates as node address 63.
	×1 (Ones place)		

Description of LED display

LED	LED name	Indication	Details
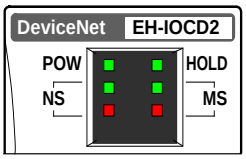	POW	Power supply (Green)	On: indicates that the DC5V power is supplied. Off: indicates that the DC5V power is not supplied or reset switch is on. State / Details: Off: Hardware error, Power supply error n times flash: I/O modules failure (n is modules failure point) On: No error
	HOLD	Output hold (Green)	Display the output hold function status. State / Details: Off: Disable the output hold function On: Enable the output hold function
	NS	DeviceNet status (Green / Red)	Indicates DeviceNet network status.
	MS	EH-IOCD2 status (Green / Red)	Indicates EH-IOCD2 status.

Description of Bottom DIP switch

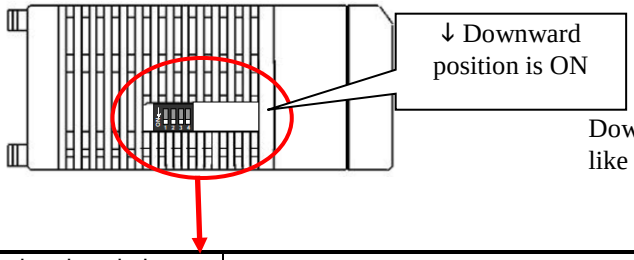

Downward position is ON side in case of bottom view like left figure.

No.	Setting description	Details
1	Output hold function selecting 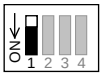 [Default setting: OFF]	When the communication timeout error occurred, it is selected whether the output data from the master is held or not. (Hold means the last data received properly is fixed.) Output hold function may be changed action depending on master unit. Please read master's manual and check the combination master unit and EH-IOCD2, before using output hold function of EH-IOCD2. **Bit1 / Position / Output hold function selection** OFF — — Disable the output hold function (Turn off all output data from the master at the communication error.) ON — 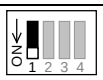 — Enable the output hold function (At the communication error, output data from master is held with last data received properly.)
2	EH-IOCD compatible mode selecting 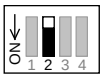 [Default setting: OFF]	It can select whether the EH-IOCD2 operates as standard mode or compatible mode. **Bit2 / Position / EH-IOCD compatible mode selection** OFF — — Standard mode (EH-IOCD2) ON — — Compatible mode (EH-IOCD)
3	No use 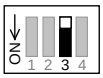 [Default setting: OFF]	Please keep off.
4	No use [Default setting: OFF]	Please keep off.

Differences between EH-IOCD and EH-IOCD2

There are some differences between EH-IOCD2 and EH-IOCD.

(1) Method of node address setting.

EH-IOCD: DIP switch.

EH-IOCD2: Rotary switch.

(2) Method of communication baud rate.

EH-IOCD: DIP switch.

EH-IOCD2: It is not necessary by using auto baud rate function.

EH-IOCD2 supports compatible mode to replace EH-IOCD without re-configuration of DeviceNet™ master.

Caution

When EH-IOCD2 is in compatible mode, EDS file and the number of I/O modules are different from standard mode.

Performance specification

Item		Specifications	
		EH-IOCD2	
		Standard mode	EH-IOCD compatible mode
Communication specifications	Communication protocol	Conform to DeviceNet Release 2.0	
	Supported connection	(1) Polling I/O connection (2) Bit Strobe I/O connection (3) Cyclic I/O connection (4) Change of State I/O connection (5) Explicit Message I/O connection	
	Range of node address	0 to 63 : Setting by rotary switch	
	Maximum I/O size	Input : 256 words, output : 256 words	
	Connector	DeviceNet open plug connector	
	Topology	Multi drop connection, Multi brunch connection using by Device tap	
	Communication cable	DeviceNet cable	
	Maximum Segment length, Transmit speed		

Baud rates	Network length: Thick cable	Network length: Thin cable	Each drop line length	Total drop line length
500kbps	100m	100m	6m	39m
250kbps	250m	100m	6m	78m
125kbps	500m	100m	6m	156m

Item	Specifications	
Communication baud rate setting	Auto baud rate function	
Output hold	Supported	
Termination	Not built-in	
EDS file	EH-IOCD2.EDS	EH-IOC~1.EDS
Functional specifications: Support base unit	EH-BS3/5/8/3A/5A/6A/8A/11A/8R	EH-BS3/5/8/3A/5A/6A/8A
Number of modules	22 modules / EH-IOCD2	16 modules / EH-IOCD(2)
Number of I/O points	1,408 points: Digital I/O 176 ch.: Analog I/O	1,024 points: Digital I/O 128 ch.: Analog I/O
Expansion unit	1 (use by EH-IOC, EH-IOCH and EH-IOCH2)	
Refresh time	500 µs	
Self-check	WDT check	
Error indication	LED	
Current consumption	Approx. 250 mA	
Standard compliant	CE, C-Tick*1	

*1 UL is not supported. Contact your local supplier for further information.

Caution

EH-IOCD2 supports digital I/O modules, Analog I/O modules (incl. RTD and Thermocouple), counter modules and positioning modules only. Note that the others are not supported. Do not use unsupported modules with EH-IOCD2.

For information on the EDS files for EH-IOCD2, contact your local supplier.

MEMO

Chapter 10 Accessories

10.1 Dummy Module

Name and function of each part		Type (Weight)	EH-DUM (Approx. 0.06 kg (0.132 lb))
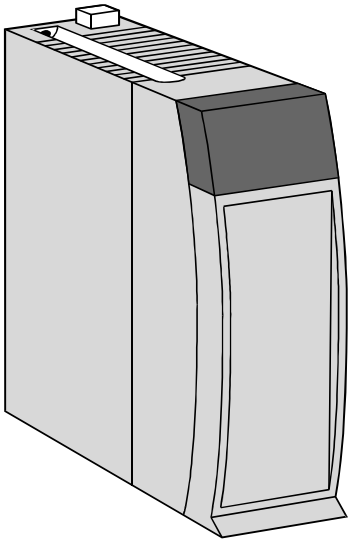		Dimensions (mm (in.))	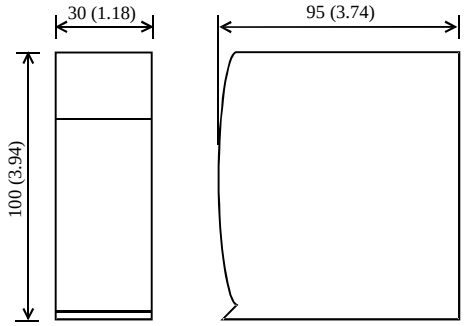
Function	This module is used for protecting the un-mounted slot.		

10.2 Expansion Cable

Name and function of each part		Type	EH-CB05A / 10A / 20A
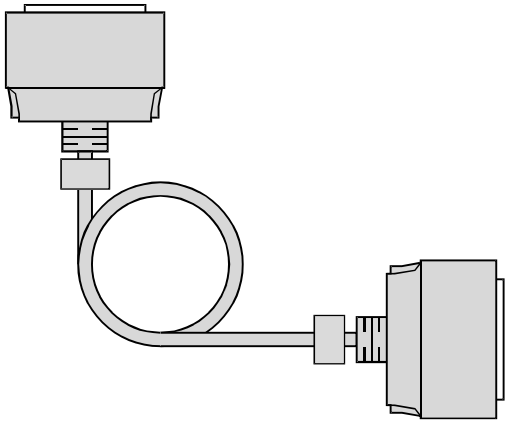		Weight	Approx. 0.21 (0.46) / 0.24 (0.53) / 0.30 kg (0.66 lb)
		Length	0.5 (1.64) / 1.0 (3.28) / 2.0 m (6.56 ft.)
Function	Connects to the expansion cable connector of the base unit and to the connector of the I/O controller. There is no directivity in the cable. Either connector can be connected to the base side.		

10.3 Terminal Block for 32/64 Points I/O Module

Name and function of each part

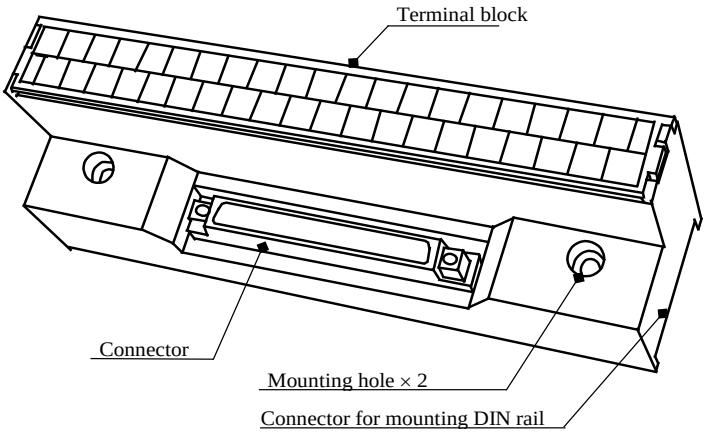

Type (Weight)	HPX7DS-40V6 (Approx. 0.22 kg (0.49 lb))
Dimensions (mm (in.))	

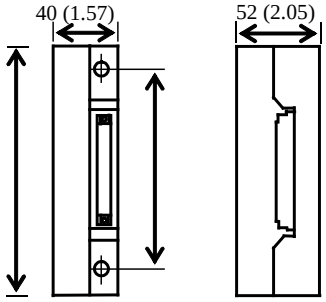

Item	Description
Terminal block	This is a terminal block for connecting the external wiring.
Connector	This is a connector with 40 pins = 20 × 2 lines for connecting each module.
Mounting hole	These holes are used when attaching the terminal unit to a panel. Use M4×25 mm screws.
Connector for mounting DIN rail	This is used when mounting attaching the terminal unit to the DIN rail.

Terminal configuration

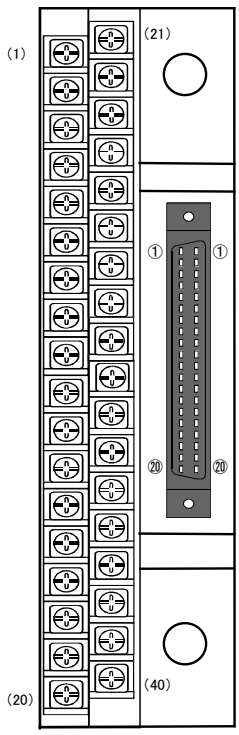

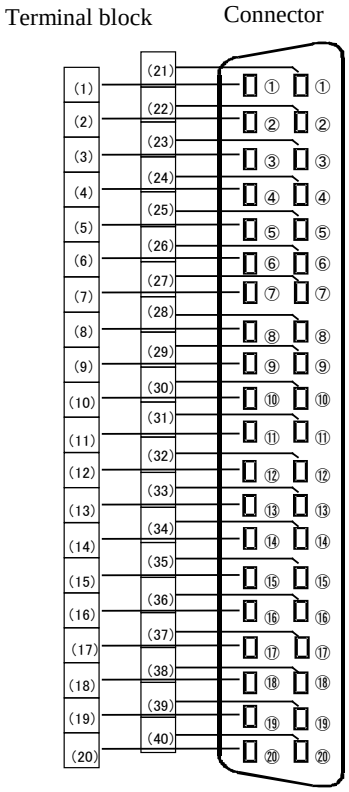

I/O and Terminal block

EH-XD32				EH-YT32 / YTP32			
I/O No. (Signal)	Terminal block No.	I/O No. (Signal)	Terminal block No.	I/O No. (Signal)	Terminal block No.	I/O No. (Signal)	Terminal block No.
Bit00	1	Bit16	21	Bit00	1	Bit16	21
Bit01	2	Bit17	22	Bit01	2	Bit17	22
Bit02	3	Bit18	23	Bit02	3	Bit18	23
Bit03	4	Bit19	24	Bit03	4	Bit19	24
Bit04	5	Bit20	25	Bit04	5	Bit20	25
Bit05	6	Bit21	26	Bit05	6	Bit21	26
Bit06	7	Bit22	27	Bit06	7	Bit22	27
Bit07	8	Bit23	28	Bit07	8	Bit23	28
C	9	C	29	C	9	C	29
Bit08	10	Bit24	30	S	10	S	30
Bit09	11	Bit25	31	Bit08	11	Bit24	31
Bit10	12	Bit26	32	Bit09	12	Bit25	32
Bit11	13	Bit27	33	Bit10	13	Bit26	33
Bit12	14	Bit28	34	Bit11	14	Bit27	34
Bit13	15	Bit29	35	Bit12	15	Bit28	35
Bit14	16	Bit30	36	Bit13	16	Bit29	36
Bit15	17	Bit31	37	Bit14	17	Bit30	37
C	18	C	38	Bit15	18	Bit31	38
N.C.	19	N.C.	39	C	19	C	39
N.C.	20	N.C.	40	S	20	S	40

*** In case the 64-point module,** the signal No.00 to 31 depends on the table mentioned above. For signal No.32 to 63 (including COM), **read signal No.00 to 31 as signal No.32 to 63** in above table.

When using the 64-point module, 2 sets of the terminal block (HPX7DS-40V6) and the connection cable (EH-CBM**W) per a module are needed.

10.4 Cable for 32 / 64-Point Module

Name and function of each part

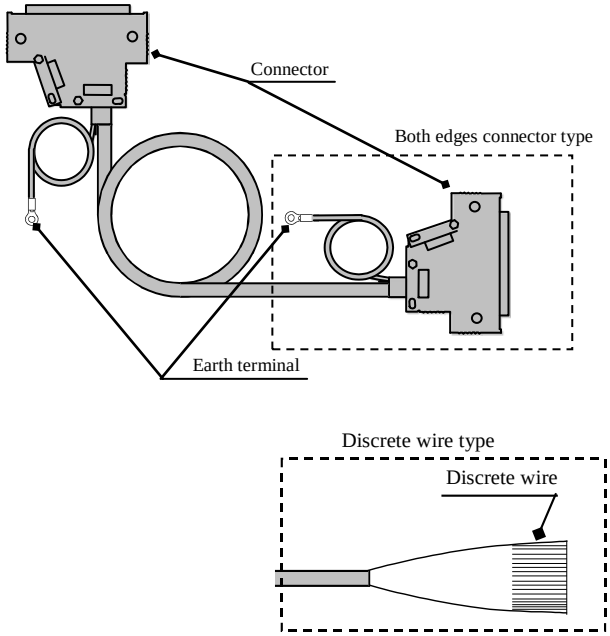

Type (Length) (Both edges connector type)	EH-CBM01W (1 m (3.28 ft.))
	EH-CBM03W (3 m (9.84 ft.))
	EH-CBM05W (5 m (16.4 ft.))
	EH-CBM10W (10 m (32.8 ft.))
Type (Length) (One edge connector type)	EH-CBM01 (1 m (3.28 ft.))
	EH-CBM03 (3 m (9.84 ft.))
	EH-CBM05 (5 m (16.4 ft.))
	EH-CBM10 (10 m (32.8 ft.))
Diameter	AWG# 28

Item	Description
Connector	This is a connector for connecting to the 32 / 64-point I/O module.
Discrete wire	This is a discrete wire for wiring from the 32 / 64-point I/O module or the terminal unit.
Earth terminal	Uses this terminal for class D grounding

Cable code for wiring

Connector Pin No.	Color	Dot (Color)	Connector Pin No.	Color	Dot (Color)
1	Orange	■(Black)	21	Orange	■■■(Black)
2	Orange	□(Red)	22	Orange	□□□(Red)
3	Gray	■(Black)	23	Gray	■■■(Black)
4	Gray	□(Red)	24	Gray	□□□(Red)
5	White	■(Black)	25	White	■■■(Black)
6	White	□(Red)	26	White	□□□(Red)
7	Yellow	■(Black)	27	Yellow	■■■(Black)
8	Yellow	□(Red)	28	Yellow	□□□(Red)
9	Pink	■(Black)	29	Pink	■■■(Black)
10	Pink	□(Red)	30	Pink	□□□(Red)
11	Orange	■■(Black)	31	Orange	■■■■(Black)
12	Orange	□□(Red)	32	Orange	□□□□(Red)
13	Gray	■■(Black)	33	Gray	■■■■(Black)
14	Gray	□□(Red)	34	Gray	□□□□(Red)
15	White	■■(Black)	35	White	■■■■(Black)
16	White	□□(Red)	36	White	□□□□(Red)
17	Yellow	■■(Black)	37	Yellow	■■■■(Black)
18	Yellow	□□(Red)	38	Yellow	□□□□(Red)
19	Pink	■■(Black)	39	Pink	■■■■(Black)
20	Pink	□□(Red)	40	Pink	□□□□(Red)

10.5 Cable for Counter Input Module

Name and function of each part

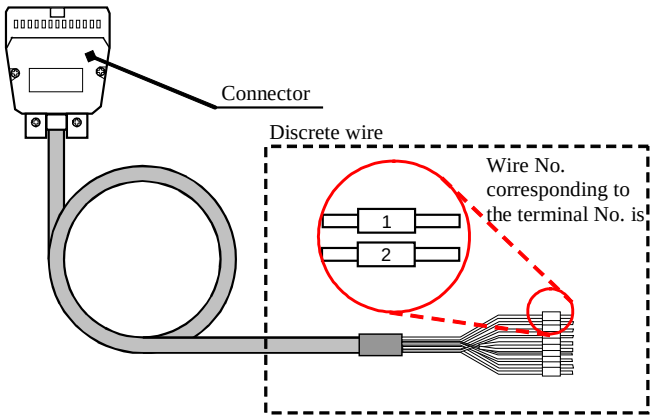

Type (Length) (One edge connector type)	EH-CUC01 (1 m (3.28 ft.))
	EH-CUC02 (2 m (6.56 ft.))
	EH-CUC03 (3 m (9.84 ft.))
	EH-CUC04 (4 m (13.1 ft.))
	EH-CUC05 (5 m (16.4 ft.))
Diameter	AWG# 24

Item	Description
Connector	This is a connector for connecting to the counter input module.
Discrete wire	This is a discrete wire for wiring from the counter input module.

MEMO

Chapter 11 PAC Installation, Mounting, Wiring

For safety use, avoid installing the PAC in the following locations.

- Excessive dusts, salty air, and / or conductive materials (iron powder, etc.)
- Direct sunlight
- Temperature less than 0 °C or more than 55 °C
- Dew condensation
- Humidity less than 5 % or more than 95 %
- Direct vibration and / or impact to the unit
- Corrosive, explosive and / or combustible gasses
- Water, chemicals and / or oil splashing on the PAC
- Close to noise emission devices

11.1 Installation

(1) Installing location and environment

(a) Use the module in the “3.1 General Specification” environment when installing the HX-CPU.

(b) Mount the PAC onto the metal plate.

(c) Install the PAC in a suitable enclosure such as a cabinet which opens with a key, tool, etc.

(2) Installation of a base unit

(a) Precaution when installing the base unit

1] Fix the base unit securely with screws in 4 places (M4, length 20 mm (0.79 in.)or longer) or DIN rail when installing it.

2] To keep using the unit within the ambient temperature range.

a) Allow ample space for air circulation. (50 mm (1.97 in.) or more at top and bottom, 10 mm (0.39 in.) or more at right and left)

b) Avoid installing the unit directly above equipment that generates a lot of heat (heater, transformer, large-capacity resistance, etc.).

c) Install a fan or a cooler to lower the ambient temperature to below 55 °C when the temperature reaches more than 55 °C.

3] Avoid mounting inside a panel where high-voltage equipment is installed.

4] Install 200 mm (7.87 in.) or more away from high-voltage wires or power wires.

5] Avoid mounting the unit upside down, in vertical, or in horizontal.

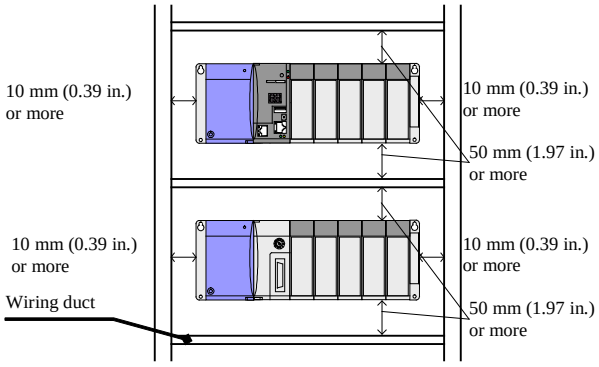

Figure 11.1 Amount of installation

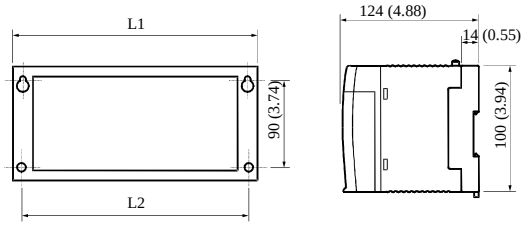

Figure 11.2 External dimensions

Table 11.1 Dimensional table

Base	L1 (External dimensions)	L2 (Mounted dimensions)
EH-BS3A	222.5 (8.76)	207 (8.15)
EH-BS5A	282.5 (11.2)	267 (10.51)
EH-BS6A	312.5(12.31)	297(11.70)
EH-BS8A	372.5 (14.67)	357 (14.06)
EH-BS11A	462.5 (18.21)	447 (17.6)
EH-BS8R	432.5 (17.01)	417 (16.42)

Unit: mm (in.)

(b) Mounting to a DIN rail

Attaching to a DIN rail

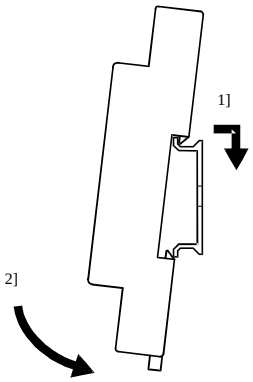

1] Hook the claw fixed at the bottom of the base unit, to the DIN rail.
2] Press the base unit into the DIN rail until it clicks.

* Make sure the base unit is securely fixed after installation.

Fixing the unit

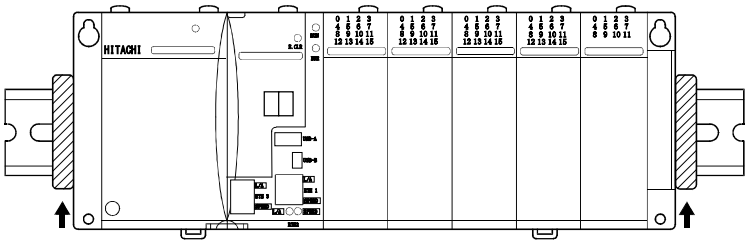

Secure the unit by installing DIN rail fixing brackets from both sides. (The product may go out of place if not secured within the fixing brackets.)

Removing the unit from the DIN rail

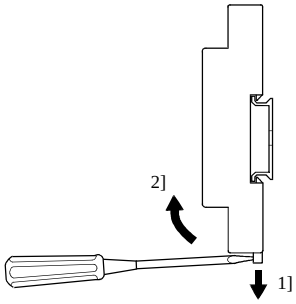

1] While lowering the DIN rail fixing mounting lever toward the bottom, raise the base upward to remove.

11.2 Mounting Module

(1) Installing

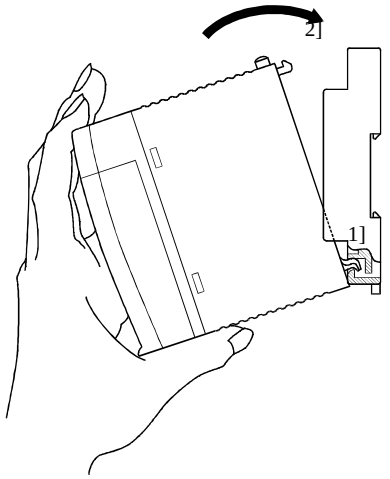

1] Hook the claw at the lower section of the module to the hole in the base.
2] Press in the upper side of the module until it clicks.

*1 Make sure the module does not come out after loading the module.
*2 Load the power module at the far left side of base unit.
*3 Load the CPU module and the I/O controller to the left of the power module.

It can reinforce with the screw after installation.
Use M4×10 mm screws in this case.

(2) Removing

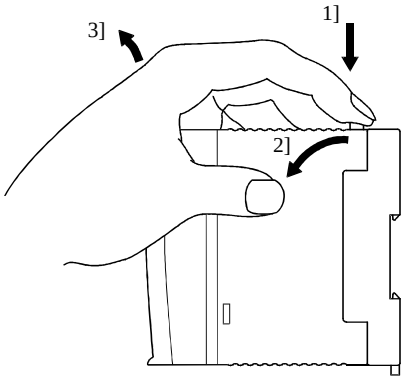

1] Push in the lock button.
2] With the lock button pushed in, pull the top of the module toward the front.
3] Raise it toward the top and pull it out.

* Pull the power module out while pushing down the two lock buttons.

11.3 Wiring

(1) Separation of the power system

There is power for the HX-CPU unit / power for I/O signal / power for general equipment as the power supply. These power supplies should be wired from separate systems as much as possible.

When these power supplied are supplied from one main power source, separate the wiring with a transformer or similar devices, so that each power supply is a separate system.

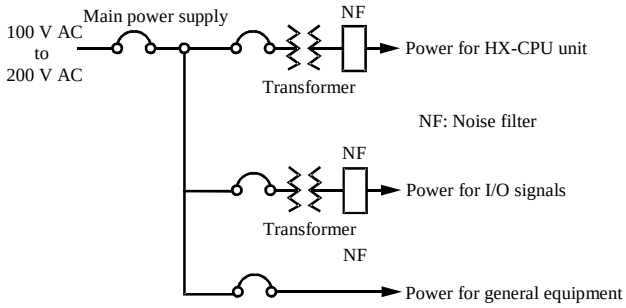

Figure 11.3 Example of power system diagram

(2) Regarding fail safe

1] Construct an interlock circuit outside the PAC.

When the PAC power supply is turned ON / OFF, the lag time and the difference in the startup time between the PAC unit power and the external power (particular DC power supply) for the PAC I/O module signals may temporarily cause the I/O not to operate normally.

Do not control the power for the EH-YR12 relays to have it perform an interlock with the external load, etc. The relay may turn on even when the power has not been supplied by an aluminum electrolytic condenser inside the module to drive the relay.

Also, it is conceivable that a fault in the external power and a failure in the PAC unit lead to abnormal actions. To prevent such actions from causing abnormal operation in the entire system, and from a point of view of creating a fail safe mechanism, construct ladder such as an emergency stop circuit, the protect circuit, and the interlock circuit, for the sections that lead to a mechanical breakdown and accident from abnormal actions outside the PAC.

2] Install a lightning arrester

To prevent damage to equipment as a result of being struck by lightning, we recommend setting up a lightning arrester for each PAC power supply ladder.

The HX-CPU detects power failures from a voltage drop of the internal 5 V DC power supply. For this reason, the load in the 5 V DC power of the unit is light, the 5 V DC is retained for a long time and operations may continue for more than 100 ms. Therefore, when using the AC input module, an OFF delay timer for coordinating with the internal 5 V DC is needed because the AC input signal turns off more quickly than the internal.

(3) Wiring to the power module

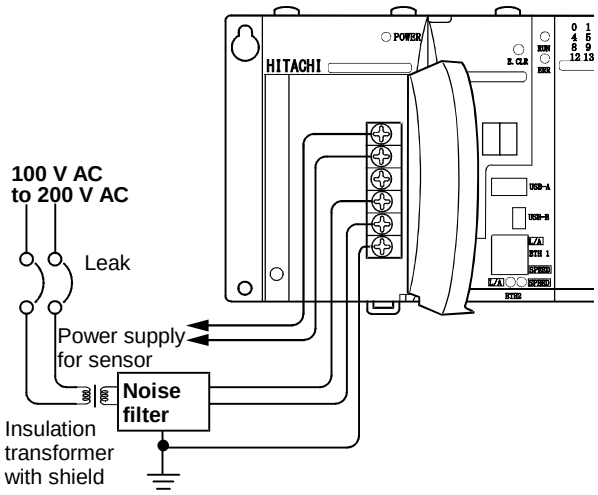

Figure 11.4 Wiring power diagram

(a) For power supply wiring, use a cable of 2 mm^2 (0.0031 in^2.) or more to prevent a voltage drop from occurring.

(b) The function ground terminal (FE terminal) should use a cable of 2 mm^2 (0.0031 in^2) or more and Class D grounding (100 Ω or less). The appropriate distance for ground cable is within 20 m (65.62 ft.).

1] Shared with instrumentation panel, relay panel grounding.

2] Avoid joint grounding with equipment that can generate noise such as high-frequency heating furnace, large power panel (several kW or more), thyristor exchanger, electric welders, etc.

3] Be sure to connect a noise filter (NF) to the power cable.

(c) A terminal screw is an M3. Tighten screws within a torque range of 0.49 to 0.78 N・m when wiring.

(d) Use the same power supply system for the basic and expansion units.

(4) Wiring cable for I/O signals

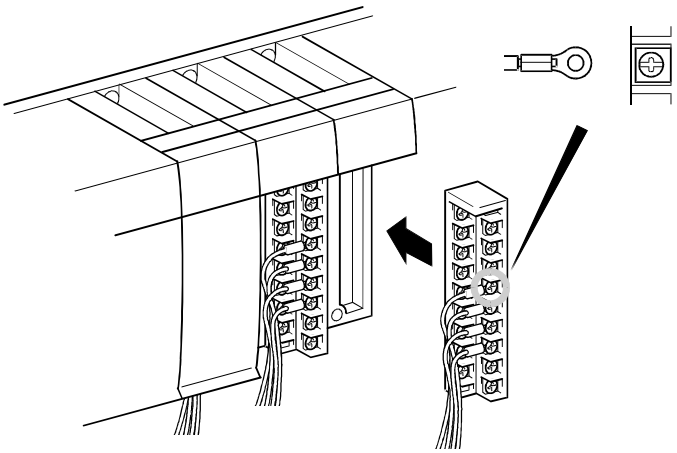

Screw for each terminal is M3.
Tighten within a torque range of 0.49 to 0.78 N・m.
Use a crimp terminal with an outer diameter of 6 mm (0.24 in.) or less when using it.
Use only up to 2 crimp terminals in the same terminal. Avoid clamping down more than 3 at the same time.
Use a cable thickness of 0.75 mm^2 (0.0011 in^2.) at the maximum. (Use a 0.5 mm^2 (0.00075 in^2.) cable when adding 2 crimp terminals in the same terminal.)
* Use shielded cable for the relay output module when corresponding to CE marking EMC command is necessary.

Attaching the terminal block

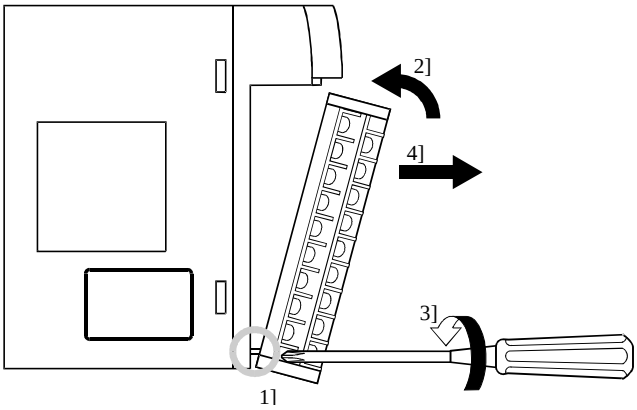

1] Align the tip of a terminal block mounting screw to the screw section of the I/O cover insertion fittings.

2] Push in the top of the terminal block until the I/O cover claw section locks with a click.

3] Tighten terminal block mounting screws while holding down the upper part of the terminal block.

4] Pull on the top of the terminal block to make cure that it is locked and cannot come out.

* Always reinstall it following the instructions above if the terminal block is removed.

(5) Input wiring for the input module

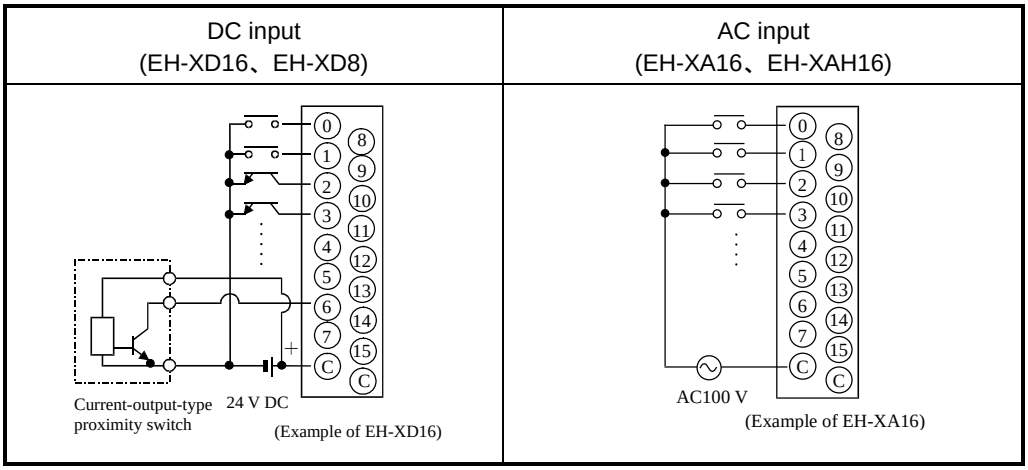

Figure 11.5 Input wiring

(a) DC input module

1] When all input terminal and the common terminal (C) are loaded with 24 V DC, the input changes to ON, and approximately 6.9 mA current in case of EH-XD8, or approximately 4 mA current in case of EH-XD16, flow to the external input contacts.

2] For sensors such as a proximity switch and photoelectric switch, current-output-type (transistor open collector) can be directly connected. For voltage-output-type sensors, connect them to the input terminal after first going through the transistor.

3] Measures to prevent contact failure in high load current contact.

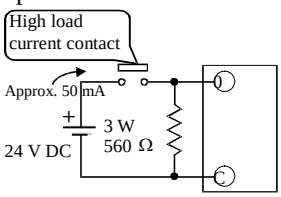

The current that flows to a contact when external contacts are closed is approximately 6.9 mA for the EH-XD8, and approximately 4 mA for EH-XD16. If it is necessary high load current to the contact, add resistance as shown in the diagram at left and supply sufficient current to the contact to prevent a contact failure .

4] Limit the wiring length within 30 m (98.43 ft.).

(b) Wiring for 32 / 64-point input module (EH-XD32, EH-XD64) (Based on CE marking)

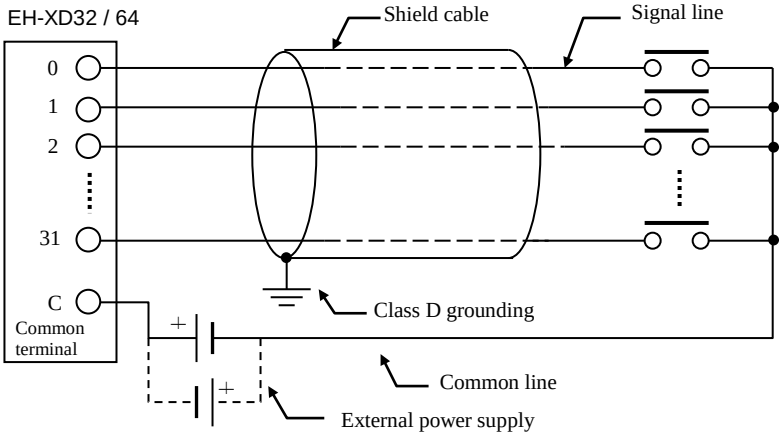

*1 Wire only the signal line through the shield cable, and provide class D grounding on the shield cable side.

*2 Do not wire the common line or S terminal line through the shield cable. Be sure to wire them independently and separately from the power line, I/O lines or power supply line.

*3 The supply line to the external power supply should be wired as close as possible to the common terminal of the output module.

(c) AC input module

When using the AC input module, if the wiring route gets longer, voltage may be generated on the input terminal though there are no actual signal, because the leak current may flow by the stray capacity between wirings..

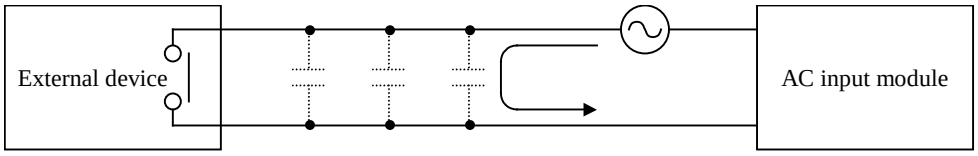

There are the following two methods 1] and 2] as its countermeasures. Please limit the voltage caused by the electrostatic combination on the input terminal, to half the maximum OFF voltage level of the input module.

1] Lower impedance of the input module by connecting the dummy resistance with the input terminal in parallel.

2] Connect the external power supply to the external device side.

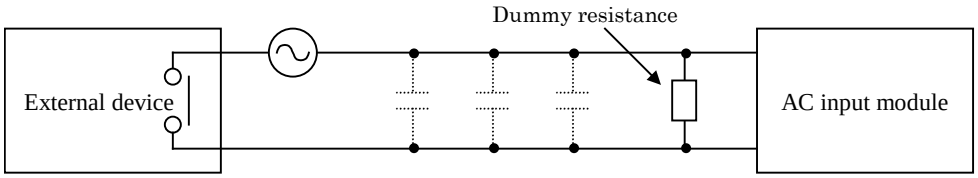

(6) Output wiring for the output module

Item	Relay output (EH-YR12)	Relay output (EH-YR16)	Transistor output (sink type) (EH-YT16, EH-YT8)	Transistor output (source type) (EH-YTP16、EH-YTP16S, EH-YTP8)
External wiring	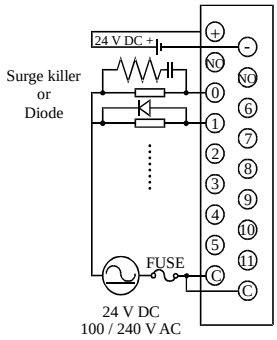	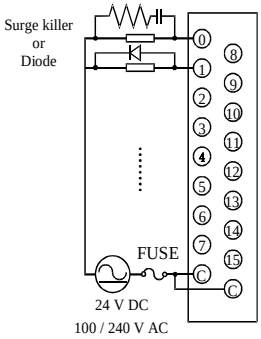	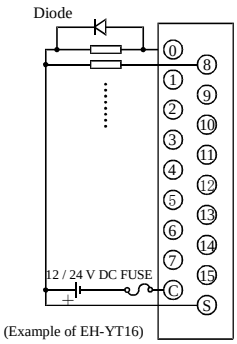	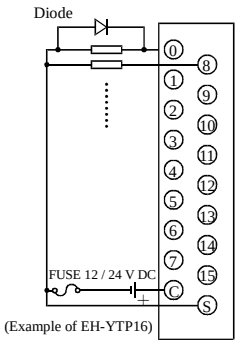

Figure 11.6 Output wiring

(a) Wiring for the relay output module

1] Life of relay contact

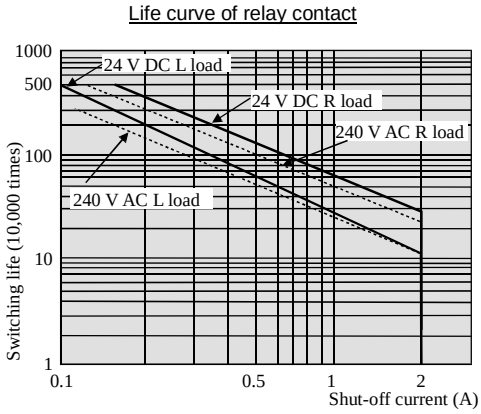

Life of the contact is also in squared reverse proportion to the current, so be aware that interrupting rush current or directly driving the condenser load will drastically reduce the life of the relay.
When switching is done with high frequency, use a transistor output module.

2] Surge killer

For inductive load, connect a surge killer (condenser 0.1 μF, + resistance of around 100 Ω) in parallel to the load. Also, for DC load, connect a flywheel diode.

3] Fuse

A fuse is not built in this module. Install a 6A fuse in the common to prevent the external wiring from burning out.

4] Power supply for driving the relay

If a 24 V DC power supply is connected to drive the relay, take care with respect to the polarity when connecting. There is a risk that the internal circuit will be damaged if the wiring is done incorrectly. Also, do not perform an interlock, etc. to the external load with the power supply for driving the relay.

(b) Wiring for the transistor output module

1] Flywheel diode

For inductive load, connect a flywheel diode in parallel.

2] S and C terminals

Always connect an S terminal and C (common) terminal. If the module is used without connecting these terminals, the internal flywheel diode does not function and there is a risk that the module will malfunction or breakdown.

3] Fuse

A fuse is inserted in the common to prevent the external wiring from burning out, but this does not protect transistor elements. Therefore, note that these elements are destroyed when the external load is short-circuited. Please contact us for repair if the external load short-circuits.

Also, if the fuse blows, there will be no output even if the LED lights up. (The fuse out lamp for the module at this time as well as a CPU module error will not be displayed.)

* If the fuse is melted or blown, do not supply power to the module after changing the fuse without eliminating the source of the problem. Damage escalation, smoke, etc., may otherwise result.

(c) Wiring for the 32 / 64-point output module (EH-YT32 / YTP32, EH-YT64 / YTP64)(Based on CE marking)

EH-YT32, EH-YTP32

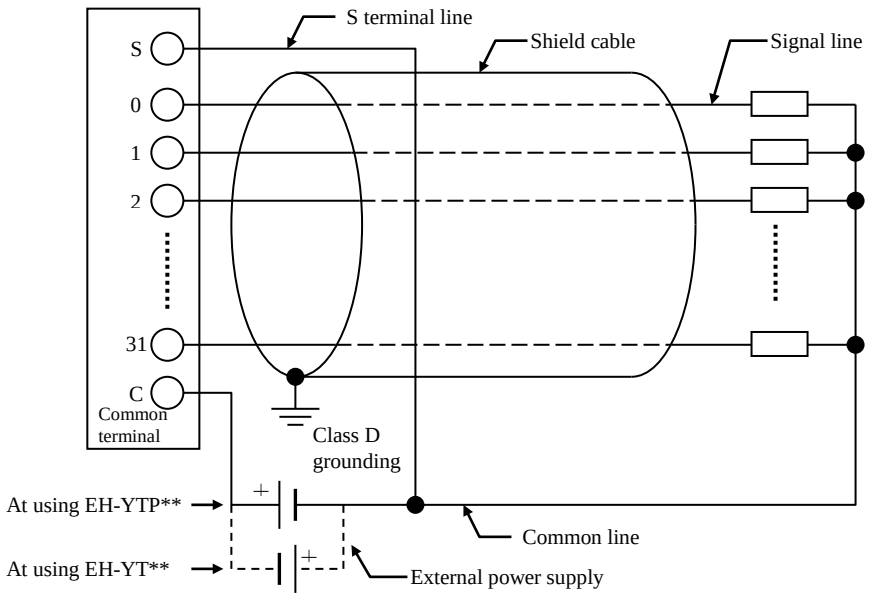

*1 Wire only the signal line through the shield cable and provide class D grounding on the shield cable side.

*2 Do not wire the common line or S terminal line through the shield cable. Be sure to wire them independently and separately from the power line, I/O lines or power supply line.

*3 The supply line to the external power supply should be wired as close as possible to the common terminal of the output module.

(7) I/O wiring for the analog module

- Do not apply excess voltage to the analog input module beyond the rated input voltage. Similarly, do not subject the module to current that exceeds the rated input current. Connecting the analog input module to a power supply other than the specified types may cause damage to the product or burning or its internal components.
- For unused channels of the analog input module, short the input terminals before use.
- For unused channels of the analog output module (unused current output channel, 2 to 3 channels), short the outputs before use.
- When wiring the external lines of the analog module, route then through the shield cables while separating them from other power lines or signal lines subject to differential voltage. Shield cables must be grounded on one side. However, whether it is more effective to ground on both side and leave both sides open, depends on the noise environment condition in the actual use. Provide appropriate grounding based on the noise environment.
- Use separate piping for the AC power supply line and the signal / data lines.
- Wire the signal lines and data lines as close as possible to the grounded surface of the cabinet or a metal bar.

(8) Wiring to the module terminal

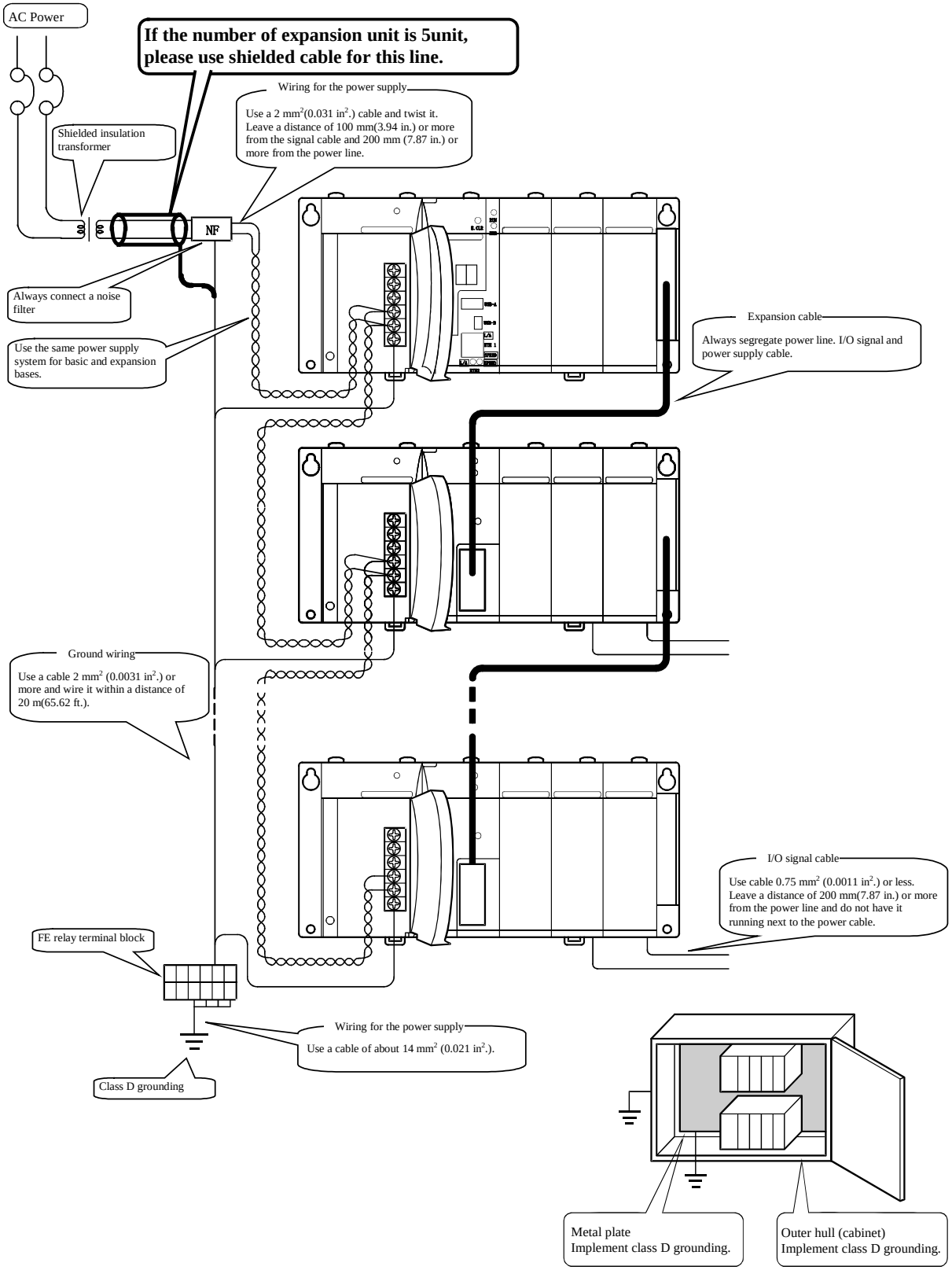

Figure 11.7 Example of wiring

Chapter 12 Maintenance and Inspection

In order to use the HX-CPU functions in the most desirable condition and maintain the system to operate normally, it is necessary to conduct daily and periodic inspections.

12.1 Daily and Periodic Inspection

(1) Daily inspection

Verify the following items while the system is running.

Table 12.1 Items for daily inspection

Item	LED display	Inspection method	Normal status	Main cause of error
Power module display	POW	Visual check	ON	Power supply error, etc.
CPU module display	RUN	Visual check	ON (Running)	OFF: Microprocessor error, memory error, etc. Refer to chapter 3 for further information.
	ERR	Visual check	OFF	ON: Serious errors such as microprocessor error or memory error, etc. Refer to chapter 3. Blink: 7x error
	7-segment	Visual check	00	Self-diagnosis error code is displayed.

*1 If power off time is more than 7 days, realtime clock data could be lost due to super capacitor.

(2) Periodic inspection

Turn off the power for the external I/O circuit, and check the following items once every six months.

Table 12.2 Items for periodic inspection

Part	Item	Check criteria	Remarks
Programming device to CPU	Check the operation of the programming device	All switch and display lamps work properly.	
Power supply	Check for the voltage fluctuations	EH-PSA, EH-PSR： 85 to 264 V AC EH-PSD： 21.6 to 26.4V DC	Tester
I/O module	Output relay life	Electrical life 200,000 times Mechanical life 10 million times	Refer to the relay contact file curve (chapter 11).
	LED	Turns ON / OFF correctly	
	External power voltage	Within the specification for each I/O module.	Refer to the specifications of I/O module
Battery (Lithium battery)	Check voltage and life	ERR lamp flashes. Within 5 years after replacement.	
Installation and connecting areas	(1) All module are securely fixed. (2) All command fits snugly. (3) All screw is tight. (4) All cables are normal.	No defects	Tighten Check insertion Tighten Visual check
Ambient environment	(1) Temperature (2) Humidity (3) Others	0 to 55 °C 5 to 95 % RH (no condensation) No dust, foreign matter, vibration	Visual check
Spare part	Check the number of parts, the storage condition	No defects	Visual check
Program	Check program contents	Compare the contents of the latest program saved and CPU contents, and make sure they are the same.	Check both master and backup.

12.2 Life of Product

The lifetime of electrolytic capacitors used in the power module is limited. Electrolytic capacitors are used in some of I/O modules to improve noise resistance. If the lifetime is exceeded, performance of product is not guaranteed. Be sure to conduct inspection and maintenance as follows.

(1) Power module

Many electrolytic capacitors are used in the power module. It is said that lifetime of electrolytic capacitor would be half when ambient temperature increases 10 °C.

If lifetime of electrolytic capacitor is exceeded, output power becomes unstable especially when output current is high due to many point of outputs are activated for example.

Prepare spare units with considering 5 years lifetime in case ambient temperature is 30 °C. For longer lifetime, take account of installation location in terms of temperature and air circulation around power unit and.

(2) CPU module

Some electrolytic capacitors are used in CPU module also. If lifetime of electrolytic capacitor is exceeded, more errors could happen since noise resistance is not enough. Be sure to overhaul CPU module periodically.

CPU module has a capacitor to maintain realtime clock data. Backup time with the capacitor is 7 days. The life of the capacitor is approximately 31,000 hours, the ambient temperature influences the life of the capacitor. When the capacitor is life, the backup time becomes short. When the time is not synchronous with a NTP server. In the case of the following, use the battery.

- During the 8 days or more of a power cut, if the retention of realtime clock data is required
- When HX-CPU is used by more than 50 ℃ of environment.

Be noted following points about lifetime of battery.

- Refer to the following tables in the lifetime of the battery.
- When using the battery, enable the battery error detection. Refer to the manual section 2.6 Configuration of HX series application manual (Software).
- The life time of the battery means the total time of interruption of power supply for PAC.
- When ERR LED is displayed flashing or the 7-segment LED is displayed 71, replace the battery within 7 days.
- The durable life of the battery is 5 years. Even if the battery is not a life, replace it every 5 years.

Battery life (Total power failure time)[Hr]	
Guaranteed value (MIN) @55 °C	Actual value (MAX) @25 °C
25,000	67,000

Chapter 13 Troubleshooting

13.1 Error Code

HX-CPU has 7-segment display and error LED to indicate an error code as listed below. If two or more errors are detected at the same time, smaller error code has higher priority to be displayed. If error is detected, read the description following countermeasures depending on error level.

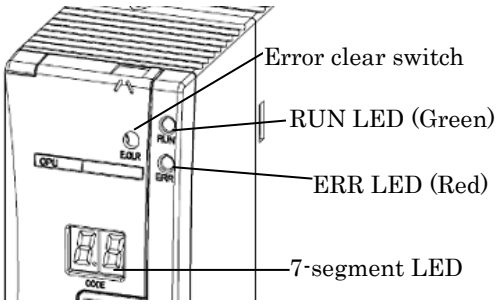

Error code	Error level	Countermeasure
88, 11 to 1F	Serious error	Cycle power. If it does not solve, contact your local supplier.
20 to 34	Exception	Exception status is cleared only by Reset operation. Execute Reset cold / warm / origin by HX-CODESYS
70 to 79	Warning	User program execution does not stop by warning. If you need to activate alarm or any action by warning, use CmpHIESErrors_HX library. Press E.CLR button to clear error code.

Err. code	Error name [Detected when]	Description	PAC System*	Applica-tion	ERR LED
88	Hardware watchdog error [Always]	The watchdog timer detected a microcomputer overload error because the microcomputer did not operate according to the system program.	Stop	Stop	ON
11	System ROM error (OS) [Power on]	Checksum value of system program (OS) in FLASH does not match the checksum calculated.	Stop	Stop	ON
12	Read / Write check failed in RAM [Power on]	Read / write check for system RAM has failed.	Stop	Stop	ON
17	System ROM error (File system) [Power on]	Checksum value of system program (File system) in FLASH does not match the checksum calculated.	Stop	Stop	ON
18	MAC address error [Power on]	MAC address is missing or wrong value.	Stop	Stop	ON
1A	Initialize failed in power management device [Power on]	Initialization of power supply has failed.	Stop	Stop	ON
1F	Flash access failed [Power on]	Access to a FLASH memory has failed.	Stop	Stop	ON

: ON, : Blink, ● : OFF

* When a PAC system stops, because a system program of PAC stops, you can't communicate with HX-CODESYS.

Err. code	Error name [Detected when]	Description	PAC System	Applica-tion	ERR LED
20	Illegal instruction [Always]	Illegal instruction was detected in a processor.	Run	Stop	☀
21	Retain identify mismatch [Power on]	Error of checksum value for retain memory data was detected.	Run	Stop	☀
23	Unresolved external references [Always]	A library doesn't exist in CPU.	Run	Stop	☀
24	Software watchdog error [Always]	Actual cycle time has exceeded watchdog time. Set longer watchdog time. A task doesn’t react within certain time.	Run	Stop	☀
25	Processor load watchdog [Always]	The processor load reached to the specific percentage. The detect condition varies with the CPU firmware version. 3.5.8.xx: 80 % 3.5.13.xx: 100 %	Run	Stop	☀
27	Division by zero [Always]	The divisor of division command is 0 in IEC program.	Run	Stop	☀
28	FPU* Division by zero [Always]	The divisor of division command is 0 in IEC program (FPU).	Run	Stop	☀
29	Access violation [Always]	Access violation was detected in a processor.	Run	Stop	☀
2A	Overflow [Always]	Overflow was detected in a processor.	Run	Stop	☀
2B	FPU* Overflow [Always]	FPU overflow was detected in a processor.	Run	Stop	☀
2C	FPU* Underflow [Always]	FPU underflow was detected in a processor.	Run	Stop	☀
2E	FPU* Invalid operation [Always]	FPU Invalid operation was detected in a processor.	Run	Stop	☀
31	Load boot project failed [Power on]	Checksum value of user program in FLASH does not match the checksum calculated.	Run	Stop	☀
32	Io Configuration Error [Always]	The setting of Modbus specification outside value was detected.	Run	Stop	●
34	Configuration file Error [Power on]	Configuration file Error was detected in a processor.	Run	Stop	☀
59	Access violation [Always]	Access violation caused by communication etc. was detected in a processor.	Run	Stop	☀

* FPU means a Floating Point Unit of main processor in the HX-CPU.

☀ : ON, ◐ : Blink, ● : OFF

Err. code	Error name [Detected when]	Description	PAC System	Applica-tion	ERR LED
70	I/O Configuration Error [Always]	I/O configuration does not match with actual I/O modules.	Run	Run	
71	Battery error [Always]	Battery voltage is low or battery is disconnected.	Run	Run	
72	Special module failure [Always]	Hardware error is detected in special module or communication module.	Run	Run	
74	Comm. module configuration error [Always]	Configuration error is detected in communication module.	Run	Run	
77	FLASH writing failure [FLASH writing]	Failure has been detected in writing FLASH memory or the number of writing times (100,000 times) has been exceeded.	Run	Run	
78	Checksum mismatch in Flash (IP address) [Power on]	Checksum value of IP address in FLASH does not match the checksum calculated.	Run	Run	
79	Real-time clock initialized [Power on]	Real-time clock was initialized, because power cut time exceeds the 7 days of the guarantee time.	Run	Run	

: ON, : Blink, : OFF

* If error cause is removed, error code remains except for error code 71 (battery error).

71 Error and ERR LED blinking automatically disappear if battery is replaced to new one.

It's possible to invalidate I/O configuration Error detection and battery error detection in PAC Parameters setting. For details, please refer to an application manual [Software].

13.2 Corrective Actions when Error Occurs

The process flow when error occurs is shown below.

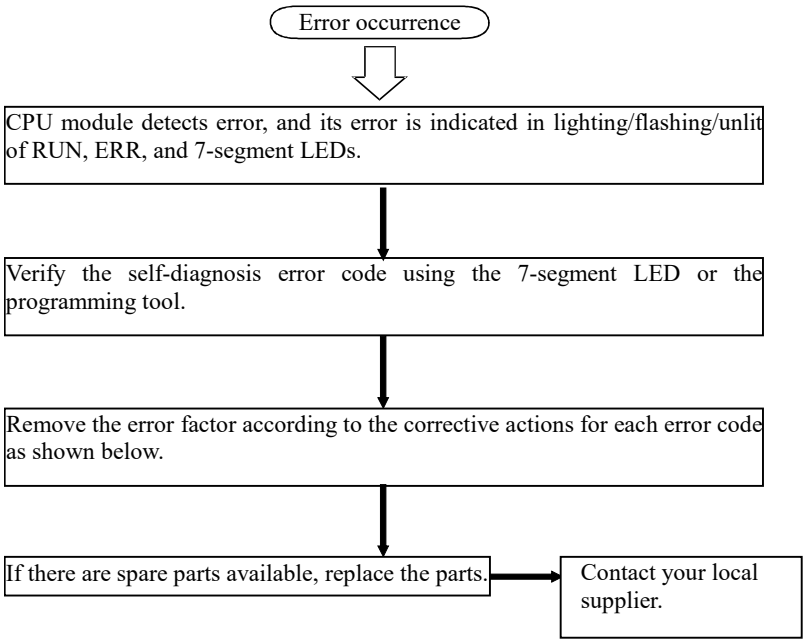

Error code	Error name	Corrective action
88	Hardware watchdog error	Recheck the fixation of the HX-CPU to the basic base unit, and restart the power supply. If the same error occurs, it is a hardware error in the HX-CPU. Replace the CPU module with a spare. Make sure that there are no machines which generates excessive noise, etc. near HX-CPU system.
11	System ROM error (OS)	
12	Read / Write check failed in RAM	
17	System ROM error (File system)	
18	MAC address error	
1A	Initialize failed in power management device	
1F	Flash access failed	
20	Illegal instruction	Check the user program.
21	Retain identify mismatch	Login to HX-CPU and reset cold.
23	Unresolved external references	Check the library. When a making library is being used, check that "External implementation" in property of Application becomes disable.
24	Software watchdog error	Change the software watchdog time of the user program. Change to the program that Processor load may be done small. For example make the task cycle long.
25	Processor load watchdog	Change to the program that Processor load may be done small. For example make the task cycle long.
27	Division by zero	Change to the program that does not execute the division by zero.
28	FPU Division by zero	Check the user program.
29	Access violation	
2A	Overflow	
2B	FPU Overflow	
2C	FPU Underflow	
2E	FPU Invalid operation	
31	Load boot project failed	The contents of the user program are destroyed. Transfer the program again after initialization.
32	Io Configuration Error	Set the correct settings.
34	Configuration file Error	Transfer the program again and reset an error. When using supporting function for security protection, reconfiguration supporting function for security protection settings.
59	Access violation	Check the communication environment.

Error code	Error name	Corrective action
70	I/O Configuration Error	Check the I/O assignment once more. Recheck the fixation of each I/O module and I/O controller, and the connection of the expansion cable.
71	Battery error	Replace the battery with a new one. Check the connection of the battery connector. When operating in the battery-less, set to disable the “Battery error detection”.
72	Special module failure	Refer to the error code of the special module, perform the error recovery processing.
74	Comm. module configuration error	Refer to the error code of the comm. module, perform the error recovery processing.
77	FLASH writing failure	After the initialization, download the user program again. If the same error occurs, it is a hardware error in the CPU module. Replace the CPU module with a spare.
78	Checksum mismatch in Flash (IP address)	Set the IP address (ETH1, 2, 3) again.
79	Real-time clock initialized	Set the time in the Real-time clock. Refer to ”SetDateAndTime” an application manual [Command references].

Resetting the factory default settings

When that does not solve the problem even after you restart and when the online connection to the HX-CODESYS has become impossible, it's possible to reset HX-CPU to factory default settings.

< How to reset the factory default settings >

(1) Remove power from the PAC.
(2) Toggle the RUN / STOP switch to STOP position.
(3) Turn on all 2 bits switches (SW1).
(4) Supply power to the PAC with E.CLR button pressed until “SP” is displayed in the 7-segment LED.

(5) Toggle the RUN / STOP switch to RUN position.
(6) It takes a few seconds to delete boot project. Then “Fn” is displayed in the 7-segment LED.

(7) Turn off all 2 bits switches (SW1).
When turning on the power next time, it starts with the factory default settings.

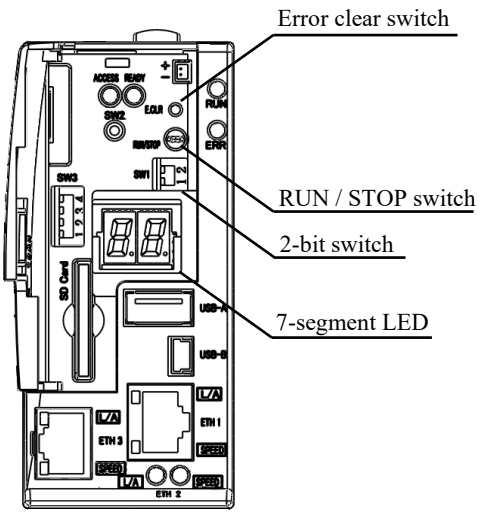

13.3 Error Libraries

As for warnings (error code 70 to 79), special libraries called “CmpHIESErrors_HX” are available as below. Use them in your application program if necessary. If it is not registered in your library repository, install CmpHIESErrors_HX.compiled-library by choosing [Tools]-[Install library...].

Error code	Libraries (CmpHIESErrors_HX)	Input	Output
all	HIESGetLastError WORD HIESGetLastError	-	Last detected error code (WORD)
All	ClearError xExecute BOOL BOOL xDone	Execution bit to clear error code (BOOL)	Result (BOOL)
70	IOConfigError BOOL xIoConfigError WORD wUnit WORD wSlot (FB)	-	70 Error bit (BOOL) Unit number (WORD) Slot number (WORD)
71	BatteryError BOOL BatteryError	-	71 Error bit (BOOL)
72	SpecialModuleError BOOL xSpecialModuleError WORD wUnit WORD wSlot (FB)	-	72 Error bit (BOOL) Unit number (WORD) Slot number (WORD)
74	ComModuleError BOOL xComModuleError WORD wUnit WORD wSlot (FB)	-	74 Error bit (BOOL) Unit number (WORD) Slot number (WORD)
77	FlashWritingError BOOL FlashWritingError	-	77 Error bit (BOOL)
78	ComParamSumError BOOL ComParamSumError	-	78 Error bit (BOOL)
79	RTCInit BOOL RTCInit	-	79 Error bit (BOOL)